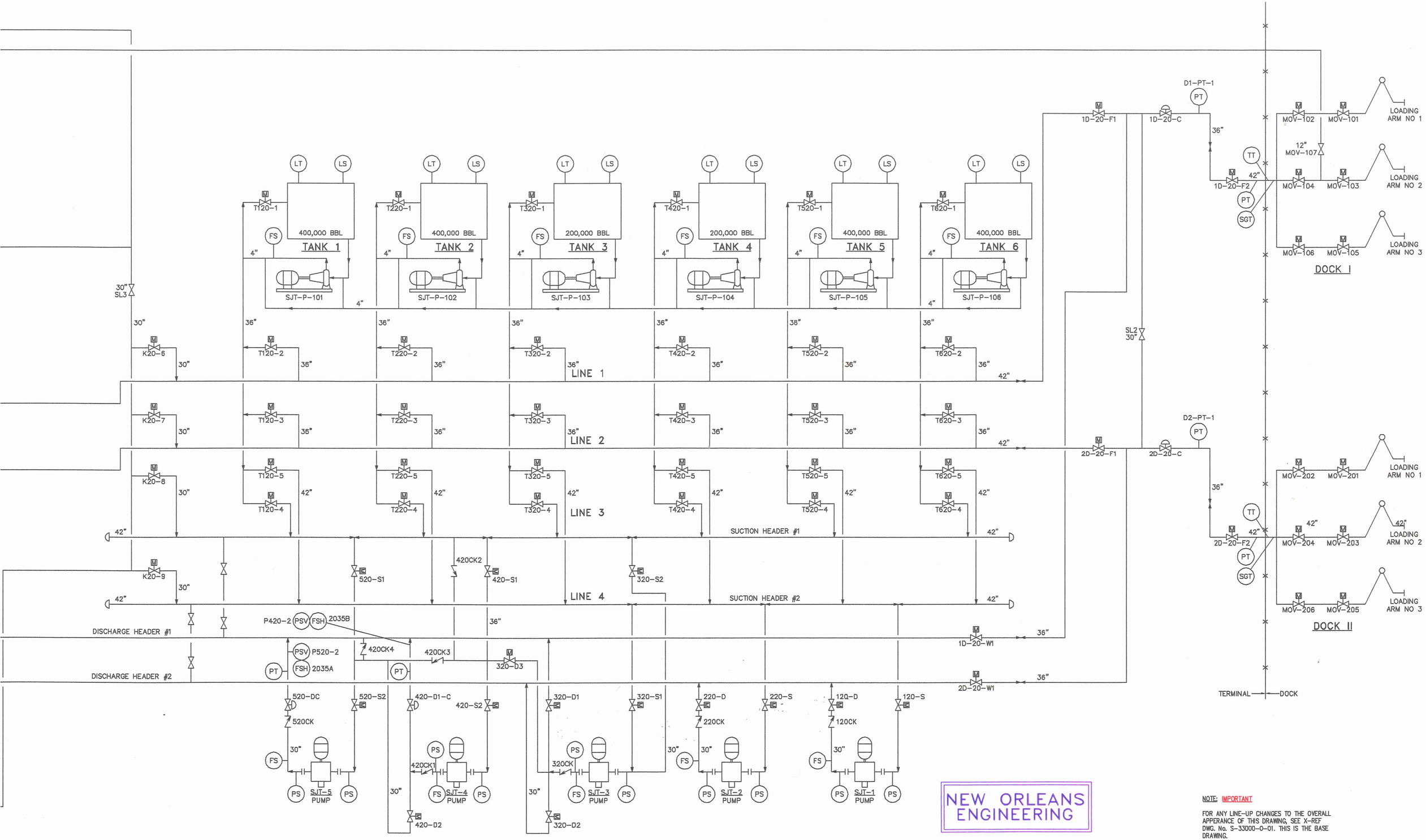

NEW ORLEANS ENGINEERING

NOTE: IMPORTANT

FOR ANY LINE-UP CHANGES TO THE OVERALL APPERANCE OF THIS DRAWING, SEE X-REF DWG. No. S-33000-0-01. THIS IS THE BASE DRAWING.

REV NO	DATE	DESCRIPTION OF REVISION	ES NO.	BY	ELEC ENGR	MECH ENGR	APP
00	6/98	NEW LINE-UPS FOR 1998		Bda		MLT	KJF

SUGARLAND TERMINAL – D.O.E.

EQUILON PIPELINE COMPANY LLC

THIS DOCUMENT IS CONFIDENTIAL AND IS THE PROPERTY OF EQUILON PIPELINE LLC. IT SHALL NOT BE REPRODUCED OR REDISTRIBUTED WITHOUT PRIOR PERMISSION. EQUILON PIPELINE LLC MAKES NO WARRENTY AS TO THE CORRECTNESS OR COMPLETENESS OF THE INFORMATION CONTAINED ON THIS DRAWING, AND THE USER ASSUMES ALL RISK OF LOSS TO PERSONS AND PROPERTY AS A RESULT OF RELIANCE THEREON.

SUGARLAND TERMINAL – LINEUPS

SCALE	NONE	DATE		REV.
DRAWN	Bda	6/98	S-33000	

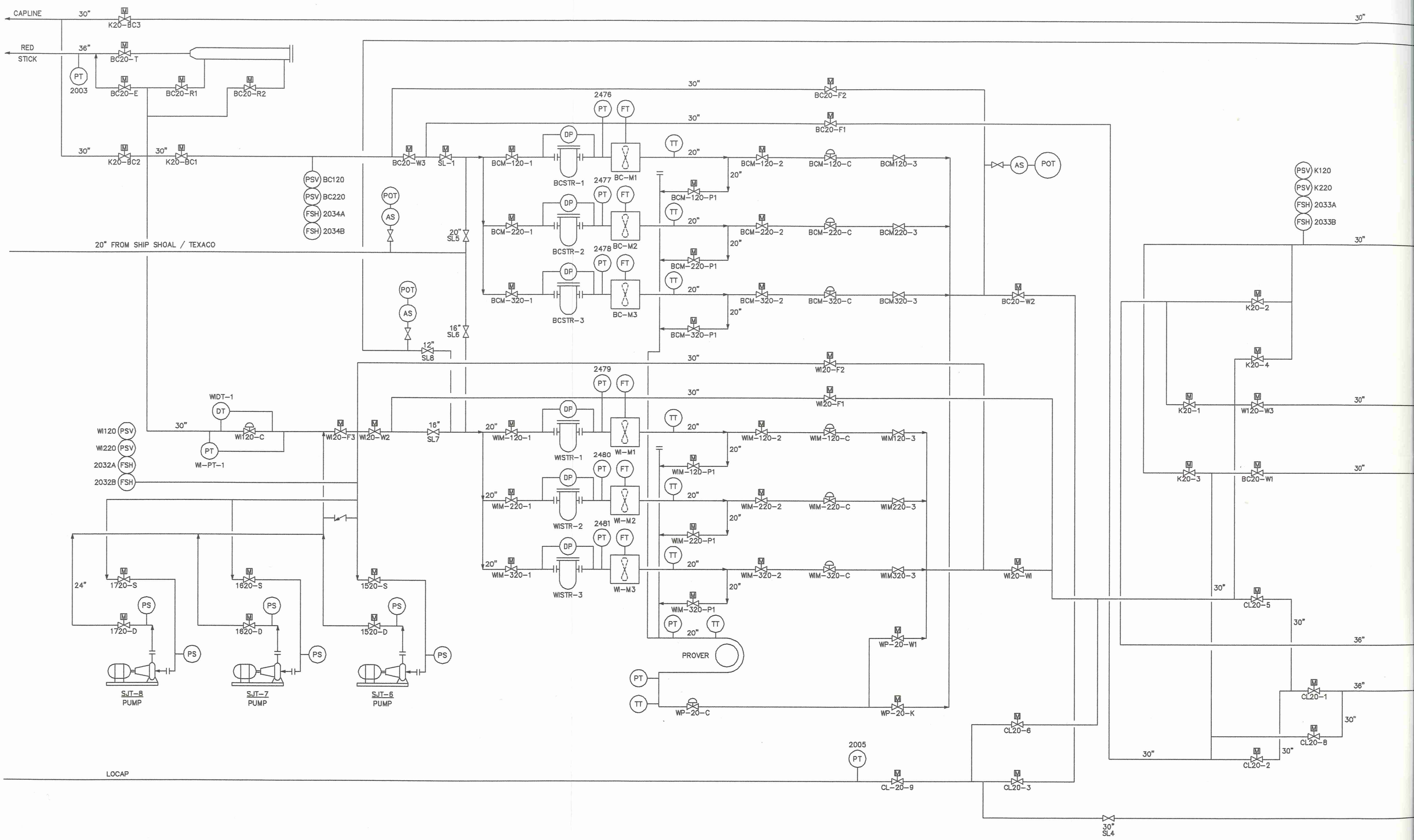

WILOWRY 07/28/99 09:34 Z:\Central_Miss_Valley\augerland_redstick\a33000-0-01.dwg - Kevin_Forrest