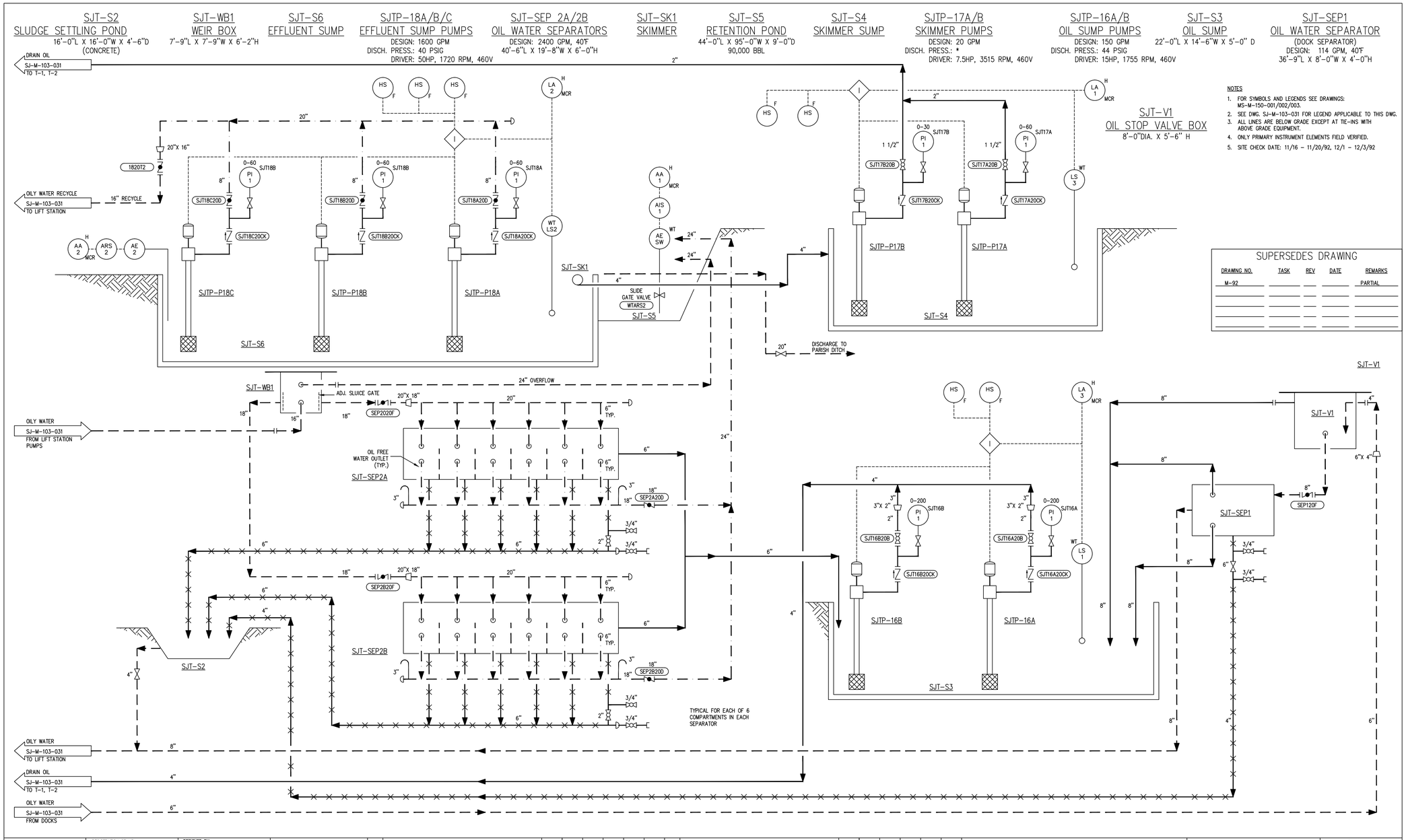

NOTES

1. FOR SYMBOLS AND LEGENDS SEE DRAWINGS: MS-M-150-001/002/003.
2. SEE DWG. SJ-M-103-031 FOR LEGEND APPLICABLE TO THIS DWG.
3. ALL LINES ARE BELOW GRADE EXCEPT AT TIE-INS WITH ABOVE GRADE EQUIPMENT.
4. ONLY PRIMARY INSTRUMENT ELEMENTS FIELD VERIFIED.
5. SITE CHECK DATE: 11/16 - 11/20/92, 12/1 - 12/3/92

SUPERSEDES DRAWING

DRAWING NO.	TASK	REV	DATE	REMARKS
M-92				PARTIAL

REGISTRATION STAMP

NUMBER

DESIGNED BY:
DRAWN BY:
CHECKED BY:
PROJECT R.E.:
SIGNATURE:
DATE:

NO.	CHANGE DESCRIPTION	DRAWN BY	CHECKED BY	PROJECT R.E.	PROJECT MANAGER	D.O.E. APPROVAL	DATE
2	AS BUILT PER ECP SJ-M/O-4610	MAC	TIES				5/17/99
1	AS BUILT PER PAN # 999.DOC, ECN-100	CD	BH				10/25/94
0	AS BUILT PER TASK NS-OM-032	DCT	EBH			JWS	9/1/93
	ORIGINAL INITIAL/SIGNATURE FOR REVISION BLOCK, P.E. SEAL AND DOE APPROVAL ARE ON HARD COPY ORIGINAL ON FILE WITH SPR						

PIPING & INSTRUMENT DIAGRAM

WASTE WATER TREATMENT

ST. JAMES TERMINAL

ST. JAMES PARISH, LOUISIANA

OFFICE OF ENGINEERING AND CONSTRUCTION

STRATEGIC PETROLEUM RESERVE

APPROVED FOR CONSTRUCTION

DATE

FLUOR DANIEL/DOE CONTRACT NUMBER:

TASK NUMBER:

DISCIPLINE: MECHANICAL

SCALE: NONE

DRAWING NUMBER: SJ-M-103-032

SHEET ___ OF ___ REV. 2

"D" SHEET-24"X 36"

ACAD FILENAME: 71030048

09/08/1993 07