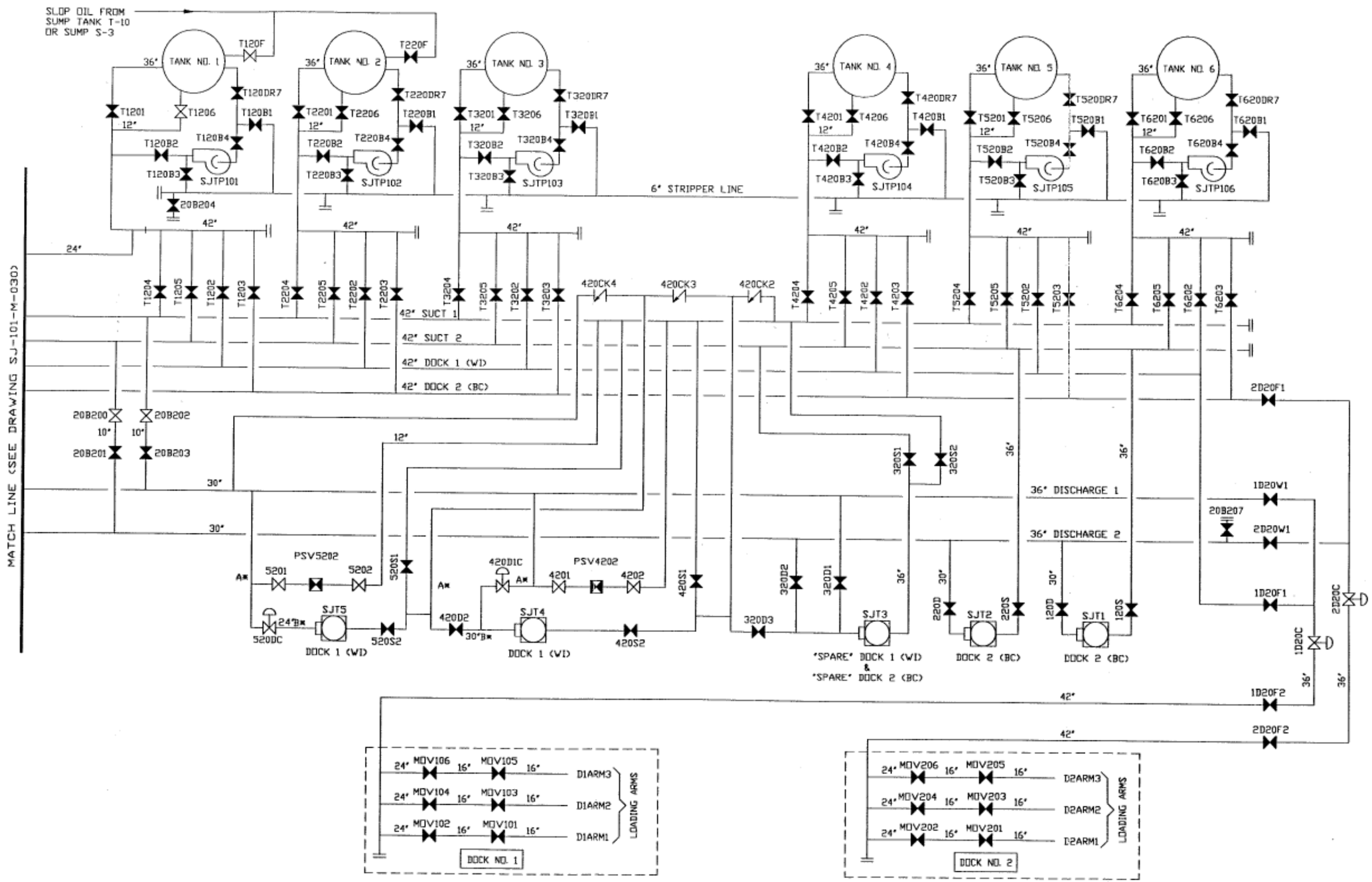

NOTE:

ALL PIPING RATED AS CLASS A* (275 PSIG) UNLESS OTHERWISE SHOWN AS CLASS B* (740 PSIG) OR CLASS C* (990 PSIG)

B** DERATED TO 300 PSIG

SURGE RELIEF VALVE (CLOSE)

CLOSE

OPEN

NOTES

NO.	CHANGE DESCRIPTION	DRAWN BY	CHECKED BY	M/O APPROVAL	D.O.E. APPROVAL	DATE
2	REVISED PER WR-92-155	ESP	SAB	GAG	JC	3/24/95
1	DWG. MADE INTO 2 SHTS, ADDED MTR SKID VALVES	ESP	JFS	GAG	JCK	6/29/94
0	RELEASED FOR OPS MANUAL	ESP	RDM	REG	JCK	8/10/92

SITE OPERATIONS MANUAL

CRUDE OIL STATIC LINEUP SHEET

ST. JAMES TERMINAL

ST. JAMES PARISH, LOUISIANA

OFFICE OF ENGINEERING AND CONSTRUCTION

STRATEGIC PETROLEUM RESERVE

PROJECT NUMBER

TASK NUMBER: 10038

DISCIPLINE: PROCESS

SCALE: NONE

DRAWING NUMBER: SJ-M-101-031

SHEET 1 OF 1

71010033