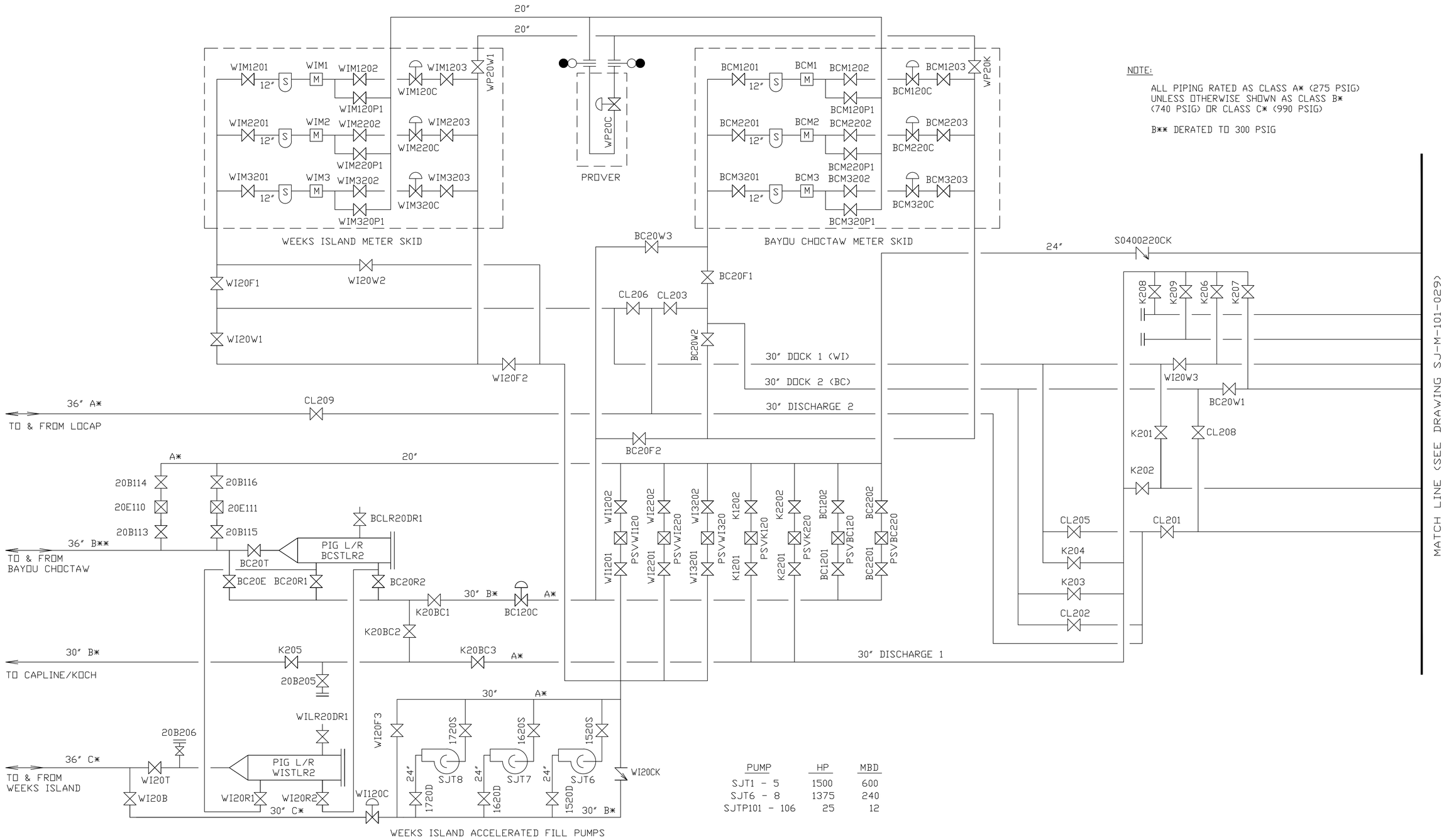

PUMP	HP	MBD
SJT1 - 5	1500	600
SJT6 - 8	1375	240
SJTP101 - 106	25	12

REGISTRATION STAMP

REVISION ____

NUMBER ____

DESIGNED BY:

DRAWN BY:

CHECKED BY:

ENGINEER OF RECORD:

SIGNATURE:

DATE:

NO.	CHANGE DESCRIPTION	DRAWN BY	CHECKED BY	PROJECT ENGINEER	ENGINEERING MANAGER	D.O.E. APPROVAL	DATE
4	AB PER TASK WR-96-138	RJY	JTF				6/23/00
3	REVISED PER PAN 70577, ECN 100	JMH	SAB				10/1/96
2	REVISED PER ECN 999-DOC	ESP	SAB	GAG	JC		3/24/95
1	DWG. MADE INTO 2 SHTS. ADDED MTR SKID VALVES	ESP	JFS	GAG	JCK		6/29/94
0	RELEASED FOR OPS MANUAL	ESP	RDM	REG	JCK		8/10/92

SITE OPERATIONS MANUAL

CRUDE OIL LINEUP SHEET

ST. JAMES TERMINAL

ST. JAMES PARISH, LOUISIANA

OFFICE OF ENGINEERING AND CONSTRUCTION

STRATEGIC PETROLEUM RESERVE

APPROVED FOR CONSTRUCTION ____

DATE ____

TASK NUMBER:

DISCIPLINE: PROCESS

SCALE: NONE

DRAWING NUMBER: SJ-M-101-015

SHEET 1 OF 1

REV. 4

ACAD FILENAME: 71010017