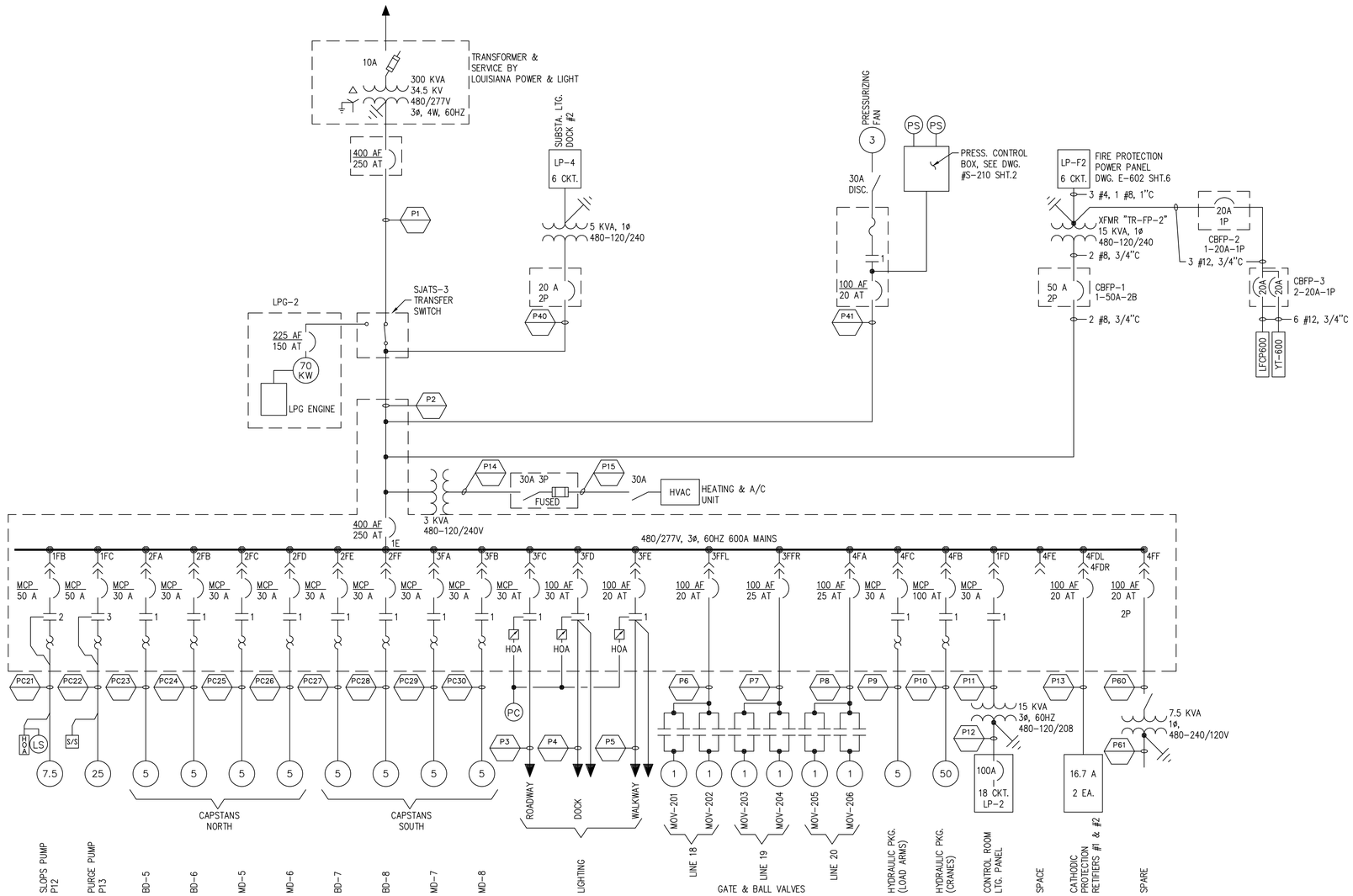

NOTES

REFERENCE

DWG. NO.	TITLE
E-601 SHT.4	DOCK #1 PLATFORM-PLAN
E-601 SHT.10	DOCK #1 SUBSTATION PLAN
E-602 SHT.4	DOCK #2 PLATFORM-PLAN
E-602 SHT.8	DOCK #2 SUBSTATION PLAN
E-601 SHT.9	DOCK #1 CABLE SCHEDULE
E-602 SHT.7	DOCK #2 CABLE SCHEDULE
E-603 SHT.2	MCC ELEVATIONS
E-603 SHT.7	DOCK #1 & #2 SUBSTATION DETAILS
SJ-E-312-142	LIGHTNING PROTECTION DETAILS FIREWATER PUMP P-3
S-210 SHT. 2 OF 2	LOADING PLATFORM - OPERATORS SHELTER DOCK # 1 & 2
E-602 SHT.6	CONTROL ROOM PLAN - DOCK # 2

SUPERSEDES DRAWING

DRAWING NO.	TASK	REV	DATE	REMARKS
E-603 SHT. 1 OF 8	NS-OM-032	14	1-12-93	

J. VOLLMAR
CGM
J. VOLLMAR

NO.	CHANGE DESCRIPTION	DRAWN BY	CHECKED BY	PROJECT R.E.	PROJECT MANAGER	D.O.E. APPROVAL	DATE
1	AS BUILT PER PAN 999-DOC, ECN #100 & 101	RSY	BH				10/27/94
0	CAD CONVERTED - NOT FIELD VERIFIED	CGM	JPV				
	TASK NO. NS-OM-032						
	PRIOR REVISIONS, ENGINEER'S SEALS AND CLIENT'S "APPROVED FOR CONSTRUCTION" SIGNATURE ARE ON FILE WITH THE SPR.						

ONE LINE DIAGRAM

DOCK NO.2

ST.JAMES DOCK
ST.JAMES PARISH, LOUISIANA

OFFICE OF ENGINEERING AND CONSTRUCTION

DEPARTMENT OF ENERGY
UNITED STATES OF AMERICA

APPROVED FOR CONSTRUCTION
DATE

FLUOR DANIEL/DOE CONTRACT NUMBER:
NS-OM-032
ELECTRICAL
NONE
SJ-E-302-065
1

ACAD FILENAME: 73020205

03/29/1993 10