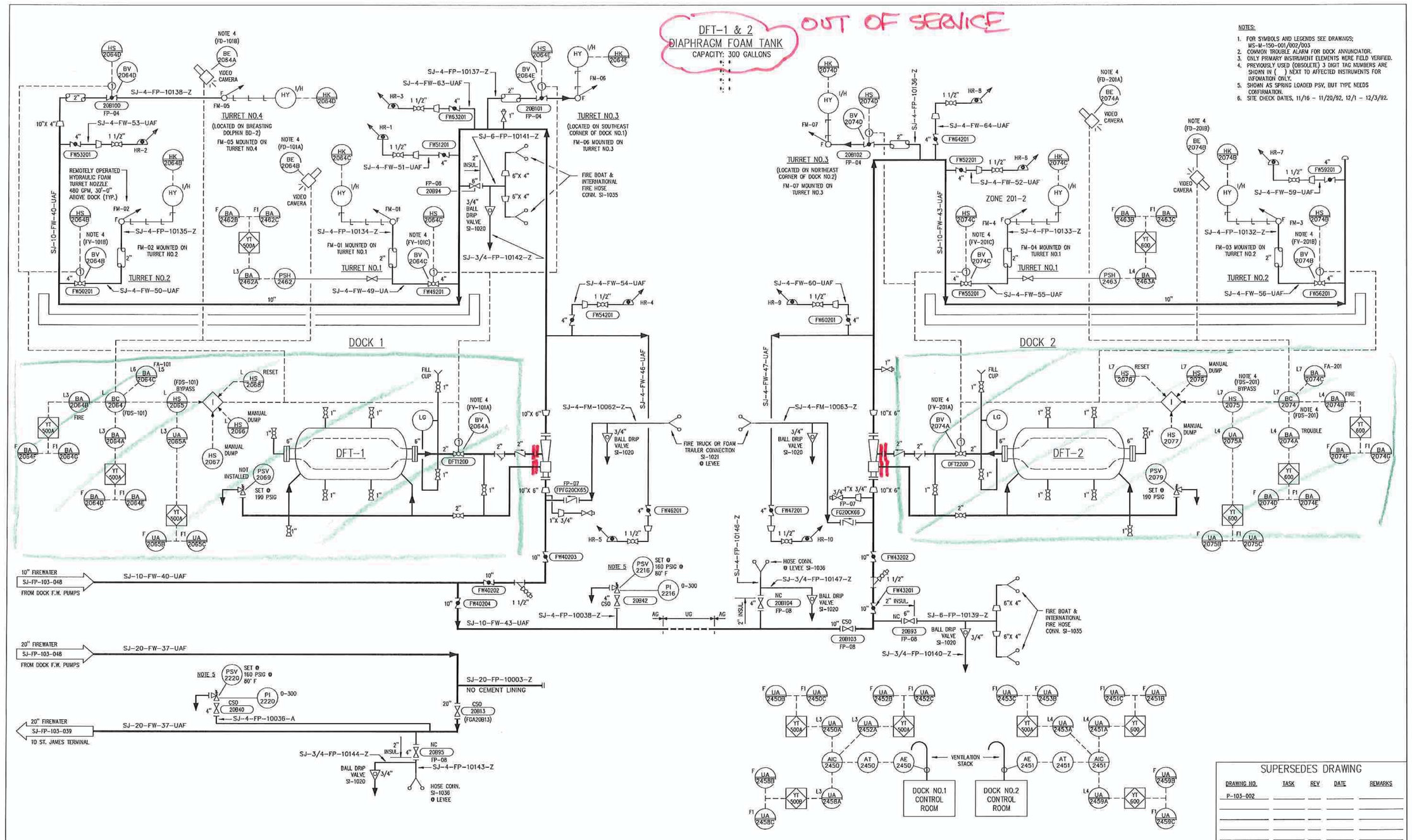

SUPERSEDES DRAWING

DRAWING NO.	TASK	REV	DATE	REMARKS
P-103-002				

NO.	CHANGE DESCRIPTION	DRAWN BY	CHECKED BY	PROJECT R.E.	PROJECT MANAGER	D.O.E. APPROVAL	DATE
2	AS BUILT PER ECP SJ-M/O-4610	MAC	TES				5/17/99
1	AS BUILT PER 999-DOC, ECN #100	RSY	BH				11/2/94
0	AS BUILT PER TASK NS-OM-032	RJR	EBH		JWS		9/1/93
	ORIGINAL INITIAL/SIGNATURE FOR REVISION BLOCK, P.E. SEAL AND DOE APPROVAL ARE ON HARD COPY ORIGINAL ON FILE WITH SPR						

REGISTRATION STAMP
DESIGNED BY:
DRAWN BY:
CHECKED BY:
PROJECT R.E.:
SIGNATURE:
DATE:
NUMBER

PIPING & INSTRUMENT DIAGRAM

FIRE PROTECTION DOCK 1 & 2

ST. JAMES DOCK
ST. JAMES PARISH, LOUISIANA

OFFICE OF ENGINEERING AND CONSTRUCTION
STRATEGIC PETROLEUM RESERVE

APPROVED FOR CONSTRUCTION
DATE

FLOOR DAWG/DOE CONTRACT NUMBER:
TASK NUMBER:
DISCIPLINE: MECHANICAL
SCALE: NONE
DRAWING NUMBER: SJ-FP-103-049
SHEET ___ OF ___
REV. 2

"D" SHEET-24"X 36"

09/08/1993 09

ACAD FILENAME: 7103065