T-4
CRUDE OIL STORAGE TANK
212'-0" ID X 36'-10" H
209,084 BBL @
DESIGN LIQUID LEVEL 33'-3" (SG 0.876)
200,000 BBL NOMINAL
OPEN FLOATING ROOF

SJT-115/116
TANK MIXERS
50 HP, 1770 RPM, 460 V
VARIABLE ANGLE

T 4/5/6 STR 4/5/6
STRIPPER PUMP SUCTION STRAINERS

SJTP-104, 105, 106
STRIPPING PUMPS
CAPACITY: 400 GPM (13,700 BPD)
DISCH. PR: 10-125 PSIG
DRIVER: 25 HP, 1765 RPM, 460 V
(VIKING MODEL M125R)

T-5/6
CRUDE OIL STORAGE TANKS
300'-0" ID X 36'-10" H
418,707 BBL @
DESIGN LIQUID LEVEL 33'-3" (SG 0.876)
400,000 BBL NOMINAL
OPEN FLOATING ROOF

SJT-117/118/119/120/121/122
TANK MIXERS
75 HP, 1780 RPM, 460 V
VARIABLE ANGLE

NOTES:
1. FOR SYMBOLS AND LEGENDS SEE DRAWINGS: MS-M-150-001/002/003.
2. FOR MOV INSTRUMENTATION SEE DRAWING SJ-M-103-035.
3. "Y" LATERALS WITH 3" X 20" SLOTS, DIFFUSER/VORTEX BREAKER.
4. ONLY PRIMARY INSTRUMENTS WERE FIELD VERIFIED.
5. SITE CHECK DATES: 11/16/92-11/20/92, 12/1/92-12/3/92.

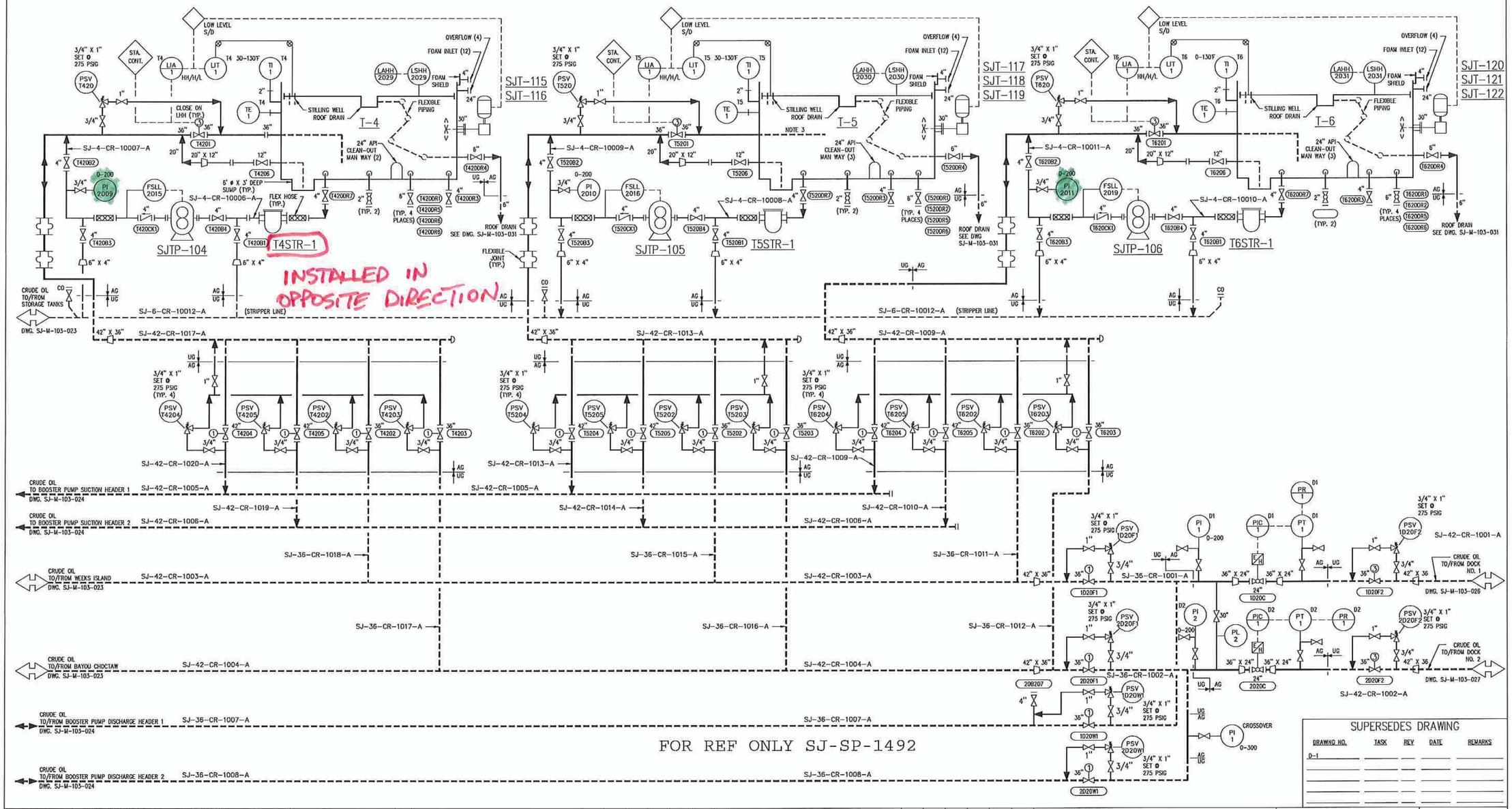

SUPERSEDES DRAWING

DRAWING NO.	TASK	REV	DATE	REMARKS
D-1				

NO.	CHANGE DESCRIPTION	DRAWN BY	CHECKED BY	PROJECT R.E.	PROJECT MANAGER	D.O.E. APPROVAL	DATE
3	AS BUILT PER ECP SJ-M/O-4610	MAC	TIES				5/17/99
2	AS BUILT PER PAN # 70540, ECN # 102	SS	WLC				4/13/95
1	AS BUILT PER PAN # 999.DOC, ECN-101	CD	BH				10/21/94
0	AS BUILT PER TASK NS-OM-032	JKM	EBH			JWS	9/1/93

ORIGINAL INITIAL/SIGNATURE FOR REVISION BLOCK, P.E. SEAL AND DOE APPROVAL ARE ON HARD COPY ORIGINAL ON FILE WITH SPR

REGISTRATION STAMP
NUMBER
DESIGNED BY:
DRAWN BY:
CHECKED BY:
PROJECT R.E.:
SIGNATURE:
DATE:

PIPING & INSTRUMENT DIAGRAM
CRUDE OIL STORAGE TANKS
T-4 THRU T-6
ST. JAMES TERMINAL
ST. JAMES PARISH, LOUISIANA

OFFICE OF ENGINEERING AND CONSTRUCTION
STRATEGIC PETROLEUM RESERVE
APPROVED FOR CONSTRUCTION
DATE

TASK NUMBER:
DISCIPLINE: MECHANICAL
SCALE: NONE
DRAWING NUMBER: SJ-M-103-025
SHEET ___ OF ___
REV. 3

ACAD FILENAME: 71030041
"D" SHEET-24"X 36"

09/07/1993 16