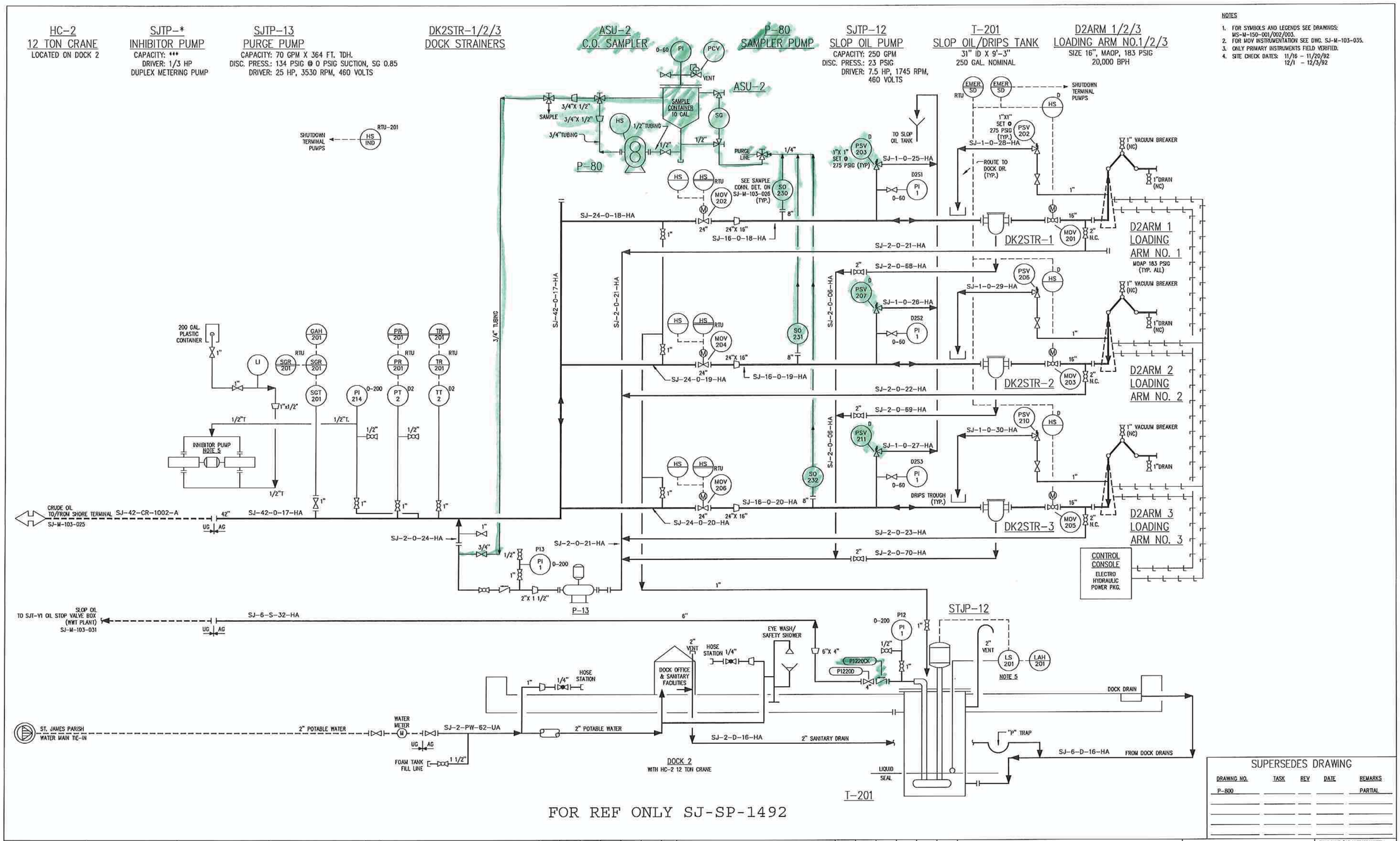

FOR REF ONLY SJ-SP-1492

NO.	CHANGE DESCRIPTION	DRAWN BY	CHECKED BY	PROJECT R.E.	PROJECT MANAGER	D.O.E. APPROVAL	DATE
1	AS BUILT PER PAN # 999.DOC, ECN-100, 101	CD	BH				10/24/94
0	AS BUILT PER TASK NS-OM-032	DCT	EBH		JWS		9/1/93
	ORIGINAL INITIAL/SIGNATURE FOR REVISION BLOCK, P.E. SEAL AND DOE APPROVAL ARE ON HARD COPY ORIGINAL ON FILE WITH SPR						

PIPING & INSTRUMENT DIAGRAM

CRUDE OIL LOADING/UNLOADING
DOCK NO. 2

ST. JAMES DOCK
ST. JAMES PARISH, LOUISIANA

OFFICE OF ENGINEERING AND CONSTRUCTION

APPROVED FOR CONSTRUCTION
DATE

FLUOR DANIEL/DOE CONTRACT NUMBER:

MECHANICAL
NONE
SJ-M-103-027
1

ACAD FILENAME: 71030043

09/07/1993 16