STRATEGIC PETROLEUM RESERVE

ENGINEERING CHANGE PROPOSAL

SUMMARY SHEET

CLASS I CHANGE

ECP NUMBER	TITLE
BC-M/O-3689	Bayou Choctaw Relief System Flange Replacement

BUDGET SOURCE

- ☐ SPR BLI _____
- ☐ CONTRACTOR BASELINE
- ☐ BCR
- ☐ OTHER _____

AUTHORITY

☒ PCCB ☐ ECC

SCHEDULE

☐ YES

MILESTONE NUMBER _____

CMCR NUMBER _____

☐ NO

TOTAL ESTIMATED COST OF CHANGE

	FY	FY	FY
DESIGN			
CONSTRUCTION / M&O			
TOTAL	$95,000		

PCCB / ECC SIGNATURES	DISPOSITION: CONCUR	DISPOSITION: NON CONCUR	DISPOSITION: DATE	COMMENTS CONDITIONS / LIMITATIONS
DOE SENIOR SITE OFFICIAL				
APM TECHNICAL ASSURANCE	t		3/11/97	
APM SYSTEMS AND PROJECTS	X		3/11/97	
APM MAINTENANCE AND OPERATIONS	✓		3/11/97	
DEPUTY PROJECT MANAGER				
DOE CMO			3/11/97	Do not replace ~~150#~~ 300#-12" valves. Insert 12" blind flange to isolate the the 150# system from Shell upgrade of pipeline upgrade in MOAP.
PROJECT MANAGER				
DEPUTY ASSISTANT SECRETARY-SPR				

PCCB / ECC ACTION

☑ FULL APPROVAL ☐ CONDITIONAL / LIMITED APPROVAL ☐ DISAPPROVAL

STRATEGIC PETROLEUM RESERVE

ENGINEERING CHANGE PROPOSAL

ECP NUMBER	ECP TITLE	PAGE 1 OF 3
BC-M/O-3689	Bayou Choctaw Relief System Flange Replacement	

CONTRACTOR CHANGE NO. / REV.	INITIATED BY	DATE	SUBMITTED BY	DATE
14002	MIKE THOMPSON	2/21/97	MIKE THOMPSON	2/21/97
	ORG./CONTRACTOR	PHONE NO.	ORG./CONTRACTOR	PHONE NO.
	SHELL OIL PRODUCTS Co.	(713) 241-1937		

PRIORITY
- ☐ EMERGENCY
- ☐ URGENT
- ☒ ROUTINE

VALUE ENGINEERING
- ☐ VEP (MANDATORY)
- ☐ VECP (VOLUNTARY)

DRAWDOWN CRITICAL
- ☐ YES
- ☐ NO

ROM ESTIMATE
$ _____

DESCRIPTION:
PROBLEM / EXISTING CONFIGURATION

The 12" piping for the surge relief system on the Bayou Choctaw Pipeline at St. James is an ANSI 150 system. This allows only a 285 psi MAOP for the pipeline.

PROPOSED SOLUTION / ENHANCEMENT

The piping between PSV-2502A and the pipeline and PSV-2502B and the pipeline will be removed and replaced with ANSI 300 piping, valves, and fittings in the same arrangement. See the attached P&ID # SJ-M-103-018 and attached isometric sketch for details of the change.

REASON / JUSTIFICATION

300 psi MAOP for the pipeline cannot be achieved with ANSI 150 flanges on the line.

CI'S AFFECTED

TECHNICAL ANALYSIS / RECOMMENDATION

IMPLEMENTATION METHOD
- ☐ SUBCONTRACT
- ☐ M&O LABOR (LOE)
- ☒ COMBINATION

ENGINEERING	DATE	DOE OPNS	DATE	
			feel	☐ CONCUR ☐ NONCONCUR

D-655

S-10983 (3'73)

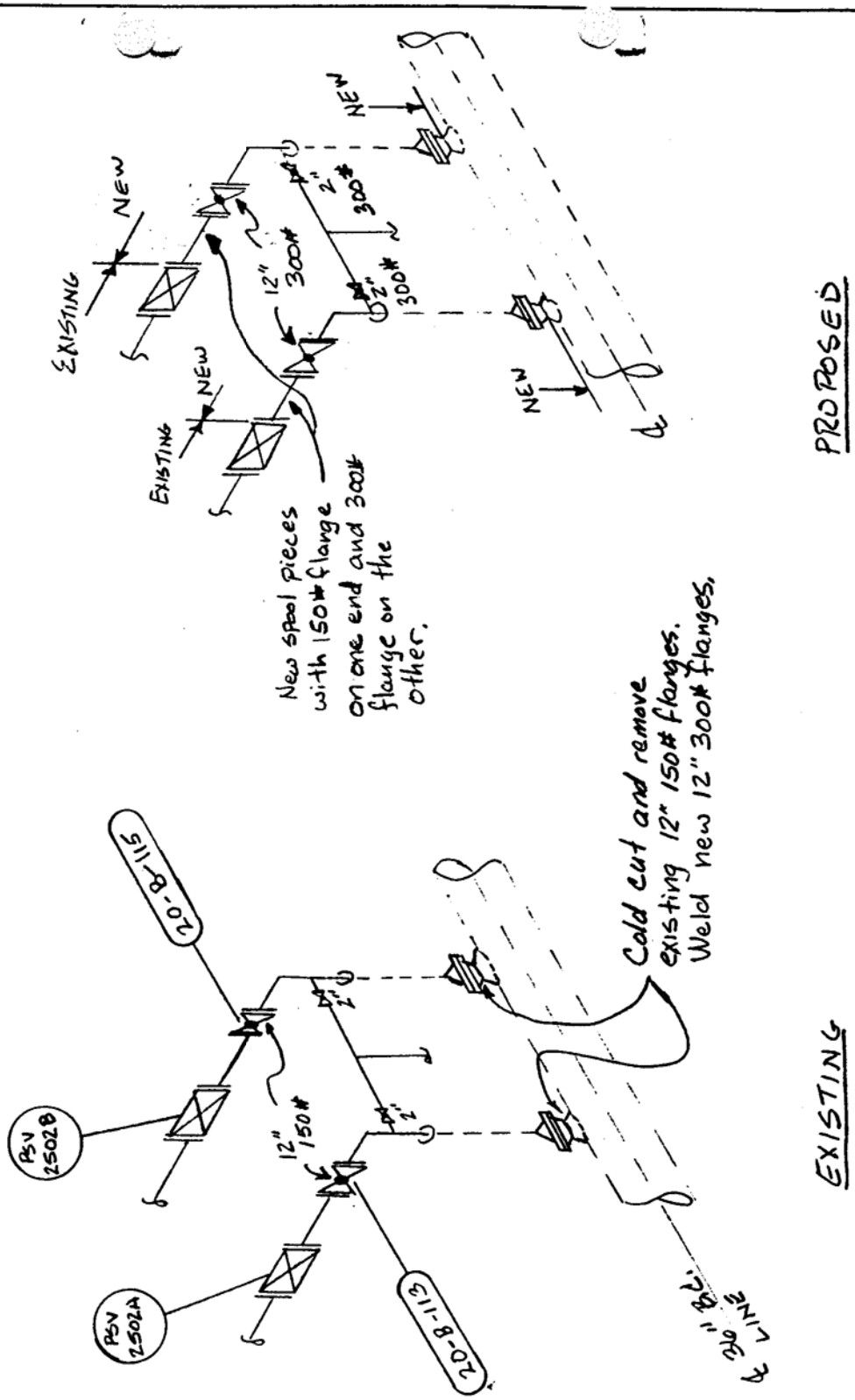

BAYOU CHOCTAW RELIEF SYSTEM FLANGE REPLACEMENT

SCALE NONE	ENGINEERING SKETCH PAD	DRAW. NO	APPROVED BY M.L. Thompson
DATE DRAWN 2/21/97	☐ OIL ☐ CHEMICAL ☐ DEVELOPMENT		
DATE REVISED			

SJT-22
SUMP PUMP
DESIGN: 145 GPM @ 68 FT. TDH
DISCHL PRESS.: 25 PSIG, SG=0.85
DRIVER: 10 HP, 3510 RPM, 460 V.

T-10
SUMP TANK

INHIBITOR DOSING PUMP
CAPACITY:
DRIVER: 1/3 HP, 1725 RPM, 115/230 V.
DUPLEX PROPORTIONING PUMP

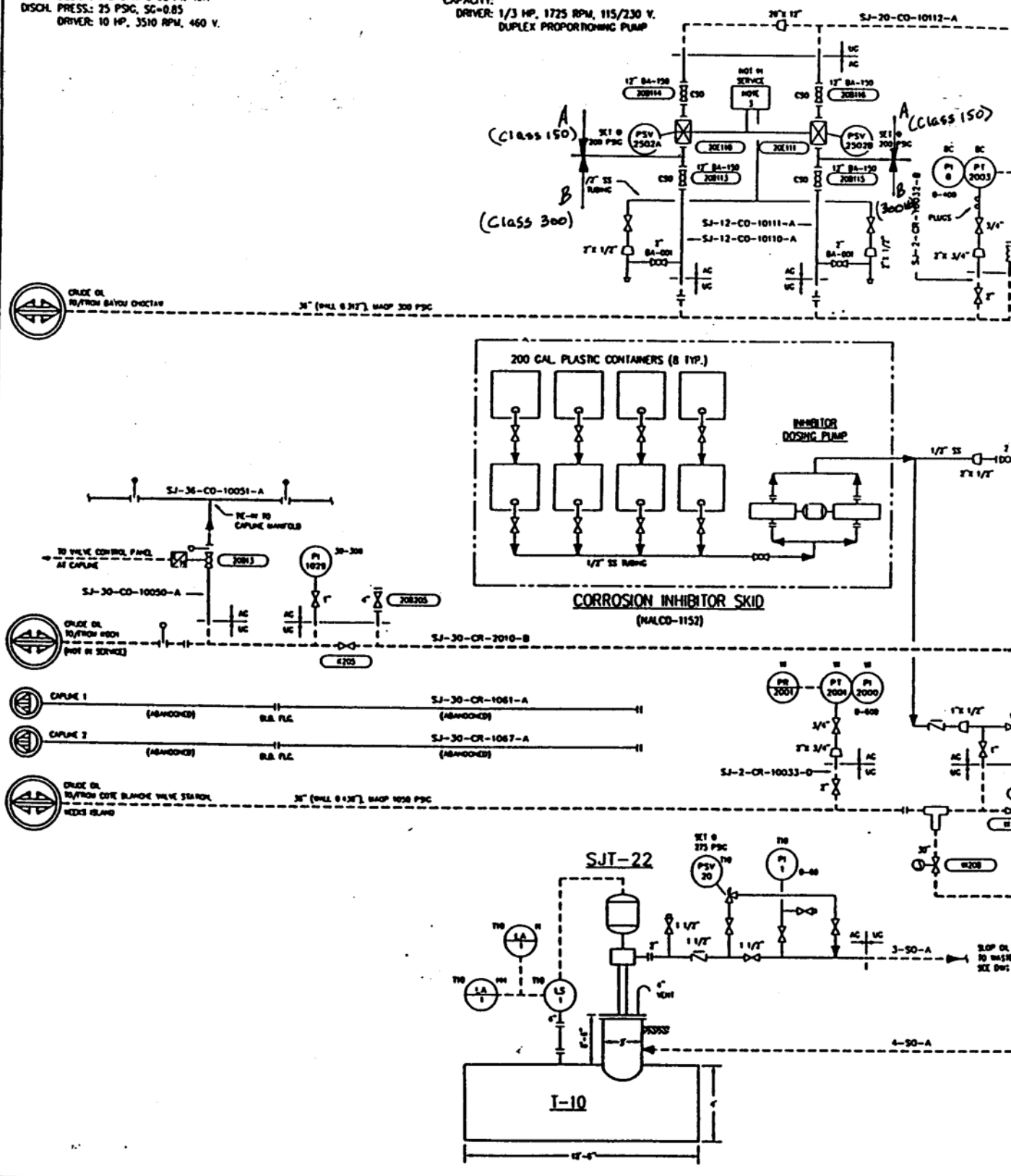

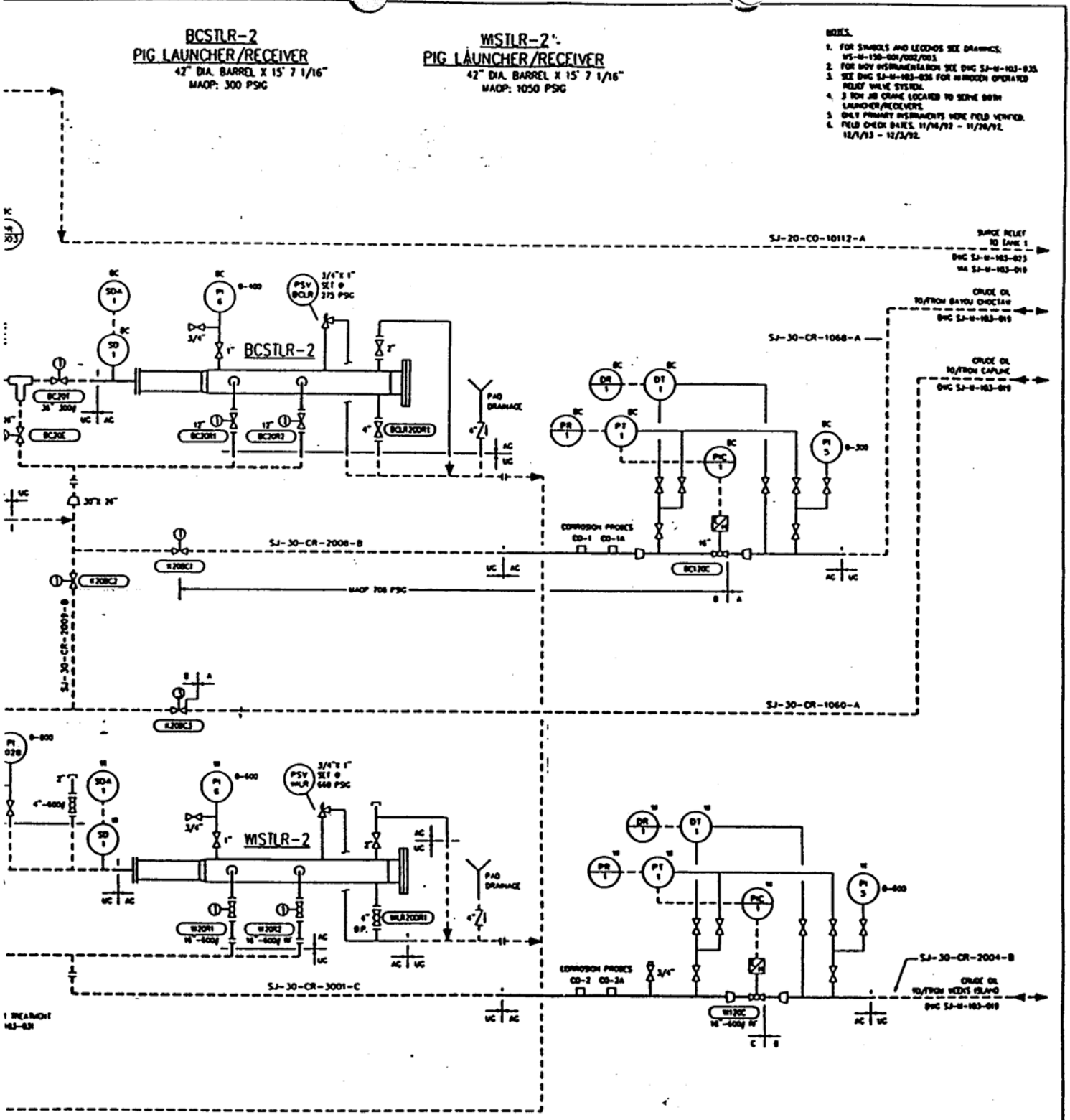

SUPERSEDES DRAWING

DRAWING NO.	TASK	REV	DATE	REMARKS
B-5				

AS-BUILT DRAWING

APPROVED FOR RELEASE

DEPARTMENT OF ENERGY
STRATEGIC PETROLEUM RESERVE
ENGINEERING AND CONSTRUCTION

DATE 9/1/93

BUILT PER TASK MS-CM-032	BET	RJR	EBH			
CHANGE DESCRIPTION	DRAWN BY	CHECKED BY	PROJECT E.C.	PROJECT MANAGER	O.O.E.	DATE

PIPING & INSTRUMENT DIAGRAM

PIG LAUNCHER/RECEIVER
WEEKS ISLAND & BAYOU CHOCTAW

ST. JAMES TERMINAL
ST. JAMES PARISH, LOUISIANA

OFFICE OF ENGINEERING AND CONSTRUCTION

STRATEGIC PETROLEUM RESERVE

DISCIPLINE: MECHANICAL
SCALE: NONE
DRAWING NUMBER: SJ-M-103-018
REV: 0

08/23/1993 08

STRATEGIC PETROLEUM RESERVE
ENGINEERING CHANGE PROPOSAL
CONFIGURATION CHANGE AFFECTED REPORT

TO BE COMPLETED BY TECHNICAL REVIEW PROCESS, ENGINEERING AND CONFIGURATION MANAGEMENT ORGANIZATION DEFINED PROCESS

ECP NO.	CONTRACTOR CHANGE NO.	REV.	CHANGE CLASSIFICATION ☐ CLASS I ☐ CLASS II	PAGE 2 OF

FUNCTIONS AFFECTED

YES/NO	ITEM
NO	LEVEL I ☐ LEVEL II ☐ CRITERIA
NO	PERFORMANCE CRITERIA
NO	RAM
NO	INTERFACE CHARACTERISTICS
NO	I/O POINTS
NO	DOE LEVEL I, II, III SCHEDULES
NO	GUARANTEES/DELIVERABLES
NO	SAFETY/ENV/FP (CIRCLE ONE)
NO	SECURITY REQUIREMENTS
NO	OPCS SOFTWARE
NO	OPCS HARDWARE
NO	OPCS FIRMWARE
NO	SETPOINTS/RANGES
NO	DIP SWITCH SETTINGS/JUMPERS
NO	MASTER CI LIST
NO	WELLHEAD CONFIGURATION
NO	SPARES/PROVISIONING REQUIREMENTS
NO	GOVERNMENT FURNISHED EQUIPMENT
NO	ENERGY USAGE
NO	OPERATIONS MODELS
NO	OTHER

DOCUMENTS AFFECTED

YES/NO	ITEMS
	PIPING
NO	101 - PROCESS FLOW DIAGRAMS
NO	102 - MECHANICAL FLOW DIAGRAMS
~~NO~~ YES	103 - PIPING AND INSTRUMENTATION DIAGRAMS (P&ID'S)
NO	104 - UTILITY FLOW DIAGRAMS
NO	105 - GENERAL PIPING PLANS
NO	106 - AREA PLANS (MECHANICAL EQUIPMENT LOCATION)
NO	122 - WELL HEAD DRAWINGS
NO	130 - VALVE LIST
NO	135 - LINE LIST
NO	140 - PSV LIST
NO	150 - STANDARDS
	CIVIL/STRUCTURAL
NO	201 - PLOT PLANS
NO	202 - SITE WORK: GRADING (ROUGH & FINISH) DRAIN FENCING
NO	210 - FOUNDATIONS: LOCATION PLANS
NO	216 - MINES (WEEKS ISLAND ONLY)
NO	250 - STANDARDS
	ELECTRICAL
NO	301 - AREA CLASSIFICATION
NO	302 - ONE LINE DIAGRAMS
NO	303 - SCHEMATIC DIAGRAMS
NO	304 - POWER PLANT AND DETAILS
NO	305 - LIGHTING PLANT AND DETAILS
NO	307 - SUBSTATION PLANS AND DETAILS
NO	308 - WIRING DIAGRAMS
NO	310 - GROUNDING
NO	311 - CONDUIT & CABLE SCHEDULES (INCLUDING INST.)
NO	313 - MCC/SWITCH GEAR EVALUATION & SCHEDULE

DOCUMENTS AFFECTED

YES/NO	ITEM
	ELECTRICAL (cont'd)
NO	315 - CATHODIC PROTECTION
NO	350 - STANDARDS
	INSTRUMENTATION
NO	401 - BLOCK DIAGRAM
NO	402 - LOOP DIAGRAMS
NO	403 - INSTRUMENT PLANS
NO	404 - INSTRUMENT WIRING DIAGRAM
NO	409 - INSTRUMENT INDEX
NO	450 - STANDARDS
	MAPPING
NO	501 - ALIGNMENT SHEETS
~~NO~~ YES	509 - PIPELINE DRWGS (MAINLINE VALVES, DRIPS, SCRAPER, TRAPS, ETC.)
NO	550 - STANDARDS
	ARCHITECTURAL
NO	720 - ELEVATIONS AND FLOOR PLANS
NO	750 - STANDARDS
	DOCUMENTATION
NO	900 - RESERVED
NO	901 - TECHNICAL/PERFORMANCE/DESIGN CRITERIA
~~NO~~ YES	910 - DESIGN DESCRIPTION/BASIS
NO	911 - PROCESS SET POINT DOCUMENTS
NO	912 - EQUIPMENT LIST
NO	913 - MOV LIST
NO	915 - ELECTRICAL SAFETY
NO	920 - I/O DOCUMENT
NO	930 - OPERATIONS MANUALS
NO	930 - MAINTENANCE MANUALS
NO	950 - STANDARD SPECIFICATIONS
NO	970 - TASK SPECIFICATIONS
NO	990 - CONFIGURATION MANAGEMENT REPORTS/I.B.M.

COMMENTS:

ENGINEERING DATE

CONFIGURATION MANAGEMENT DATE

3-21-97

W:\E&C_STDS\FORMS\ECP.DOT

EH 9/26/97