STRATEGIC PETROLEUM RESERVE PROJECT PROPOSAL

(M&O CONTRACTOR FORM)

SITE(S) AFFECTED: SJ	
CONTRACTOR CHANGE NO.: 74011	REV:
☒ ENGINEERING CHANGE:	
☐ OTHER: (ADMIN/NON-ENGR. CHNG)	
ECP NO.:	

SECTION 1 - SUMMARY INFORMATION

TITLE: SUGERLAND TERMINAL DEBOTTLENECKING

SPONSOR: M. THOMPSON (Shell)
ORG:.SHELL
PHONE: 504/241-1937

RECOMMENDED RANK: 01

FUNDING/SCHEDULE IMPACT

SOURCE	TOTAL ESTIMATED COST				SCHEDULING
☐ SPR BLI _____	FY	____	____	____	☐ NO IMPACT
☐ CONTRACTOR BASELINE	DESIGN	____	____	____	☐ NEW SCHEDULE REQ'D.
☐ O&M	CONSTRUCTION/ IMPLEMENTATION	____	____	____	☐ SCHEDULE CHANGE REQ'D.
☐ LE					☐ MILESTONE _____
☐ MM	TOTAL:	____	____	____	☐ CMCR NO. _____
☐ OTHER _____					
☐ BCR					

AUTHORITY

☐ PCCB ☐ CLASS I
☐ ECC ☐ CLASS II
☐ CONTRACTOR

FINAL DISPOSITION

☐ APPROVE
☐ CONDITIONAL APPROVAL
☐ DISAPPROVE
☐ CANCEL

SECTION II - DYNMcDERMOTT REVIEW AND APPROVAL (CLASS II)

REVIEWERS (NAME/ORG.)	CONCURRENCE YES	CONCURRENCE NO	COMMENTS:
SITE MANAGER	☐	☐	
SITE ENGINEER	☐	☐	
	☐	☐	
	☐	☐	
	☐	☐	
	☐	☐	
	☐	☐	
	☐	☐	
	☐	☐	
	☐	☐	
	☐	☐	

TRB CHAIRMAN	DATE	DISPOSITION ☐ CONCUR ☐ APPROVE ☐ DISAPP. ☐ CANCEL	COMMENTS
O&M PROJECTS COORDINATOR: Tony Garner	DATE: 8/24/90	DISPOSITION ☒ CONCUR ☐ APPROVE ☐ DISAPP. ☐ CANCEL	

TRBSUM2.DOT

EH

STRATEGIC PETROLEUM RESERVE
PROJECT PROPOSAL

(M&O CONTRACTOR FORM)

SITE(S) AFFECTED: SJ	
CONTRACTOR CHANGE NO: 74011	REV
☒ ENGINEERING CHANGE	
☐ OTHER (ADMIN/NON-ENGR. CHNG)	
BCP NO:	

SECTION I - SUMMARY INFORMATION

TITLE: SUGERLAND TERMINAL DEBOTTLENECKING

SPONSOR: M. THOMPSON (Shell)
ORG.: SHELL
PHONE: 504/241-1937

FUNDING/SCHEDULE IMPACT		RECOMMENDED RANK:
SOURCE	TOTAL ESTIMATED COST	SCHEDULING
☐ SPR BLI	FY	☐ NO IMPACT
☐ CONTRACTOR BASELINE		☐ NEW SCHEDULE REQ'D.
☐ O&M	DESIGN	☐ SCHEDULE CHANGE REQ'D.
☐ LE	CONSTRUCTION/ IMPLEMENTATION	☐ MILESTONE
☐ MM		☐ CMCR NO.
☐ OTHER	TOTAL	
☐ BCR		

AUTHORITY

☐ PCCB ☐ CLASS I
☐ ECC ☐ CLASS II
☐ CONTRACTOR

FINAL DISPOSITION

☐ APPROVE
☐ CONDITIONAL APPROVAL
☐ DISAPPROVE
☐ CANCEL

SECTION II - DYNMcDERMOTT REVIEW AND APPROVAL (CLASS II)

REVIEWERS (NAME/ORG.)	CONCURRENCE YES	NO	COMMENTS:
SITE MANAGER	☑	☐	
SDF ENGINEER	☑	☐	
	☐	☐	
	☐	☐	
	☐	☐	
	☐	☐	
	☐	☐	
	☐	☐	
	☐	☐	
	☐	☐	
	☐	☐	

TRB CHAIRMAN	DATE	DISPOSITION	COMMENTS
		☐ CONCUR ☐ APPROVE ☐ DISAPP. ☐ CANCEL	
O&M PROJECTS COORDINATOR	**DATE**	**DISPOSITION**	
		☐ CONCUR ☐ APPROVE ☐ DISAPP ☐ CANCEL	

TRBSUM2.DOT

STRATEGIC PETROLEUM RESERVE

ENGINEERING CHANGE PROPOSAL

SUMMARY SHEET

CLASS I CHANGE

ECP NUMBER	TITLE
SJ-M/O-4610	SUGARLAND TERMINAL DEBOTTLENECKING

BUDGET SOURCE

- [ ] SPR BLI _____
- [ ] CONTRACTOR BASELINE
- [ ] BCR
- [ ] OTHER _____

AUTHORITY

- [x] PCCB
- [ ] ECC

SCHEDULE

- [ ] YES
  - MILESTONE NUMBER _____
  - CMCR NUMBER _____
- [x] NO

TOTAL ESTIMATED COST OF CHANGE

	FY 98	FY	FY
DESIGN			
CONSTRUCTION / M&O			
TOTAL	$ 1,425,000		

PCCB / ECC SIGNATURES	DISPOSITION: CONCUR	DISPOSITION: NON CONCUR	DISPOSITION: DATE	COMMENTS CONDITIONS / LIMITATIONS
DOE SENIOR SITE OFFICIAL				
APM TECHNICAL ASSURANCE	✓		8/24/98	
APM SYSTEMS AND PROJECTS	✓		8/24/98	
APM MAINTENANCE AND OPERATIONS	✓		8/24/98	
DEPUTY PROJECT MANAGER				
DOE CMO				
PROJECT MANAGER				
DEPUTY ASSISTANT SECRETARY-SPR				

PCCB / ECC ACTION

- [x] FULL APPROVAL
- [ ] CONDITIONAL / LIMITED APPROVAL
- [ ] DISAPPROVAL

D-882

STRATEGIC PETROLEUM RESERVE

WR #

ENGINEERING CHANGE PROPOSAL

ECP NUMBER	ECP TITLE	PAGE 1 OF
SJ-M/O-4610	Sugarland Terminal Debottlenecking	

CONTRACTOR CHANGE NO./REV.	INITIATED BY	DATE	SUBMITTED BY	DATE
74-011	M. L. Thompson	8/6/98	M. L. Thompson	8/6/98
	ORG./CONTRACTOR	PHONE NO.	ORG./CONTRACTOR	PHONE NO.
	Equilon Enterprises	241-1937		

PRIORITY

- ☐ EMERGENCY
- ☐ URGENT
- ☒ ROUTINE

VALUE ENGINEERING	DRAWDOWN CRITICAL	ROM ESTIMATE
☐ VEP (MANDATORY)	☐ YES	$ 1,425,000
☐ VECP (VOLUNTARY)	☐ NO	

DESCRIPTION:

PROBLEM / EXISTING CONFIGURATION The configuration of the Sugarland Terminal limits the number of oil movements that can be made at the same time. Equilon anticipates that within 4 to 6 months, we will need to have increased flexibility in making movements through the terminal. The current dock facilities do not allow for barge loading or unloading. Equilon anticipates needing to move barge traffic across the dock in the next 3 months.

PROPOSED SOLUTION / ENHANCEMENT The proposed solution consists of several new connections and "jumpovers" within the terminal. These changes are shown in red on the attached line up sheets. We also plan to convert the idled 20" water effluent line into crude oil service for barge loading and unloading. The line was built to the same specification as the crude oil lines within the terminal and will be inspected and hydrotested before being placed in service. Mooring bits will be added to Dock 1 to facilitate docking barges.

None of the proposed changes will limit the DOE's ability to move oil to or from Bayou Choctaw. The dock modifacations will not inhibit ship movements at Dock 1.

REASON / JUSTIFICATION These changes are being made to accomodate the start up of the Redstick (Bayou Choctaw) pipeline, anticipated barge traffic, and the existing business.

CI'S AFFECTED

TECHNCIAL ANALYSIS/RECOMMENDATION

IMPLEMENTATION METHOD

- ☐ SUBCONTRACT
- ☐ M&O LABOR (LOE)
- ☐ COMBINATION

ENGINEERING	DATE	DOE SSR	DATE
Michael L. Thompson	8/6/98		☐ CONCUR ☐ NONCONCUR

D-655

W:\EAC_STDS\FORMS\ECP.DOT

STRATEGIC PETROLEUM RESERVE

WR #

ENGINEERING CHANGE PROPOSAL

ECP NUMBER	ECP TITLE	PAGE 1 OF ___
SJ-M/O-4610	Sugarland Terminal Debottlenecking	

CONTRACTOR CHANGE NO./REV.	INITIATED BY	DATE	SUBMITTED BY	DATE
	M. L. Thompson	8/6/98	M. L. Thompson	8/6/98
	ORG./CONTRACTOR	PHONE NO.	ORG./CONTRACTOR	PHONE NO.
	Equilon Enterprises	241-1937		

PRIORITY

- ☐ EMERGENCY
- ☐ URGENT
- ☒ ROUTINE

VALUE ENGINEERING	DRAWDOWN CRITICAL	ROM ESTIMATE
☐ VEP (MANDATORY)	☐ YES	$ 1,425,000___
☐ VECP (VOLUNTARY)	☐ NO	

DESCRIPTION:

PROBLEM / EXISTING CONFIGURATION The configuration of the Sugarland Terminal limits the number of oil movements that can be made at the same time. Equilon anticipates that within 4 to 6 months, we will need to have increased flexibility in making movements through the terminal. The current dock facilities do not allow for barge loading or unloading. Equilon anticipates needing to move barge traffic across the dock in the next 3 months.

PROPOSED SOLUTION / ENHANCEMENT The proposed solution consists of several new connections and "jumpovers" within the terminal. These changes are shown in red on the attached line up sheets. We also plan to convert the idled 20" water effluent line into crude oil service for barge loading and unloading. The line was built to the same specification as the crude oil lines within the terminal and will be inspected and hydrotested before being placed in service. Mooring bits will be added to Dock 1 to facilitate docking barges.

None of the proposed changes will limit the DOE's ability to move oil to or from Bayou Choctaw. The dock modifacations will not inhibit ship movements at Dock 1.

REASON / JUSTIFICATION These changes are being made to accomodate the start up of the Redstick (Bayou Choctaw) pipeline, anticipated barge traffic, and the existing business.

CI'S AFFECTED —

TECHNCIAL ANALYSIS/RECOMMENDATION

IMPLEMENTATION METHOD

- ☐ SUBCONTRACT
- ☐ M&O LABOR (LOE)
- ☐ COMBINATION

ENGINEERING	DATE	DOE SSR	DATE	
	8/6/98	[signature]	8/6/98	☒ CONCUR ☐ NONCONCUR

D-655

W: E&C_STDS\FORMS\ECP.DOT

STRATEGIC PETROLEUM RESERVE
ENGINEERING CHANGE PROPOSAL
CONFIGURATION CHANGE AFFECTED REPORT

TO BE COMPLETED BY TECHNICAL REVIEW PROCESS, ENGINEERING AND CONFIGURATION MANAGEMENT ORGANIZATION DEFINED PROCESS

ECP NO.	CONTRACTOR CHANGE NO.	REV.	CHANGE CLASSIFICATION
	74011		☐ CLASS I ☐ CLASS II PAGE 2 OF

FUNCTIONS AFFECTED

YES/NO	ITEM
YES	LEVEL I ☒ LEVEL II ☐ CRITERIA
NO	PERFORMANCE CRITERIA
NO	RAM
NO	INTERFACE CHARACTERISTICS
NO	I/O POINTS
NO	DOE LEVEL I, II, III SCHEDULES
NO	GUARANTEES/DELIVERABLES
NO	SAFETY/ENV/FP (CIRCLE ONE)
NO	SECURITY REQUIREMENTS
~~NO~~ yes	OPCS SOFTWARE
NO	OPCS HARDWARE
NO	OPCS FIRMWARE
~~NO~~ yes	SETPOINTS/RANGES
NO	DIP SWITCH SETTINGS/JUMPERS
~~NO~~ yes	MASTER CI LIST
NO	WELLHEAD CONFIGURATION
~~NO~~ yes	SPARES/PROVISIONING REQUIREMENTS
NO	GOVERNMENT FURNISHED EQUIPMENT
NO	ENERGY USAGE
~~NO~~ yes	OPERATIONS MODELS
YES	OTHER
	DOCUMENTS AFFECTED
	ITEMS
	PIPING
~~NO~~ yes	101 - PROCESS FLOW DIAGRAMS
NO	102 - MECHANICAL FLOW DIAGRAMS
YES	103 - PIPING AND INSTRUMENTATION DIAGRAMS (P&ID'S)
NO	104 - UTILITY FLOW DIAGRAMS
NO	105 - GENERAL PIPING PLANS
NO	106 - AREA PLANS (MECHANICAL EQUIPMENT LOCATION)
~~YES~~ NO	122 - WELL HEAD DRAWINGS
NO	123 – WELL COMPLETION CONFIGURATION DRAWINGS
~~NO~~ yes	130 - VALVE LIST
~~NO~~ yes	135 - LINE LIST
~~NO~~ yes	140 - PSV LIST
NO	150 - STANDARDS
	CIVIL/STRUCTURAL
~~NO~~ yes	201 - PLOT PLANS
NO	202 - SITE WORK: GRADING (ROUGH & FINISH) DRAIN FENCING
NO	210 - FOUNDATIONS: LOCATION PLANS
NO	216 - MINES (WEEKS ISLAND ONLY)
NO	250 - STANDARDS
	ELECTRICAL
NO	301 - AREA CLASSIFICATION
~~NO~~ yes	302 - ONE LINE DIAGRAMS
NO	303 - SCHEMATIC DIAGRAMS
YES	304 - POWER PLANS AND DETAILS
NO	305 - LIGHTING PLANS AND DETAILS
NO	307 - SUBSTATION PLANS AND DETAILS
YES	308 - WIRING DIAGRAMS
NO	310 - GROUNDING
~~NO~~ yes	311 - CONDUIT & CABLE SCHEDULES (INCLUDING INST.)
NO	313 - MCC/SWITCH GEAR ELEVATION & SCHEDULE

DOCUMENTS AFFECTED

YES/NO	ITEM
	ELECTRICAL (cont'd)
NO	315 - CATHODIC PROTECTION
NO	350 - STANDARDS
	INSTRUMENTATION
NO	401 - BLOCK DIAGRAM
~~NO~~ yes	402 - LOOP DIAGRAMS
~~NO~~ yes	403 - INSTRUMENT PLANS AND DETAILS
NO	404 - INSTRUMENT WIRING DIAGRAM
~~NO~~ yes	409 - INSTRUMENT INDEX
NO	450 - STANDARDS
	MAPPING
NO	501 - ALIGNMENT SHEETS
NO	509 - PIPELINE DRWGS (MAINLINE VALVES, DRIPS, SCRAPER, TRAPS, ETC.)
NO	550 - STANDARDS
	ARCHITECTURAL
NO	720 - ELEVATIONS AND FLOOR PLANS
NO	750 - STANDARDS
	DOCUMENTATION
NO	900 - RESERVED
NO	901 - TECHNICAL/PERFORMANCE/DESIGN CRITERIA
~~NO~~ yes	910 - DESIGN DESCRIPTION/BASIS
~~NO~~ yes	911 - PROCESS SET POINT DOCUMENTS
~~NO~~ yes	912 - EQUIPMENT LIST
~~NO~~ yes	913 - MOV LIST
NO	915 - ELECTRICAL SAFETY
~~NO~~ yes	920 - I/O DOCUMENT
YES	930 - OPERATIONS MANUALS
~~NO~~ yes	930 - MAINTENANCE MANUALS
NO	950 - STANDARD SPECIFICATIONS
NO	970 - TASK SPECIFICATIONS
~~NO~~ yes	990 - CONFIGURATION MANAGEMENT REPORTS/I.B.O.M.

COMMENTS:

ENGINEERING	DATE	CONFIGURATION MANAGEMENT	DATE
		M Rhyzell	8/19/98
		EH 8-17-98	

W:\E&C_STDS\FORMS\ECP.DOT

STRATEGIC PETROLEUM RESERVE

WR #

ENGINEERING CHANGE PROPOSAL

SOFTWARE, HARDWARE, FIRMWARE CHANGE

CONTRACTOR CHANGE NUMBER | REVISION NUMBER | ECP NUMBER | PAGE 3 OF __

SOFTWARE CHANGE ANALYSIS	HARDWARE/SOFTWARE AFFECTED (NOTE: REDLINE CI BOM)

DISPOSITION OF PARTS

☐ REWORK SITE COMPONENTS ONLY ☐ REWORK ALL SITE COMPONENTS ☐ COMPONENTS NOT AFFECTED

☐ OTHER (DESCRIBE) __

COMPONENT COMPATIBILITY (LIST COMPONENTS SEPERATELY IF COMPATIBILITIES ARE DIFFERENT)

☐ INTERCHANGEABLE ☐ DRAWDOWN COMPATIBLE ☐ NONCOMPATIBLE

OPCS SUPPORT ENGINEER DATE FUNCTIONAL MANAGER DATE

IMPLEMENTATION / TEST COMMENTS

LINEUP SHEETS
(Sheet 1 of 2)

SUGARLAND TERMINAL DEBOTTLENECKIN

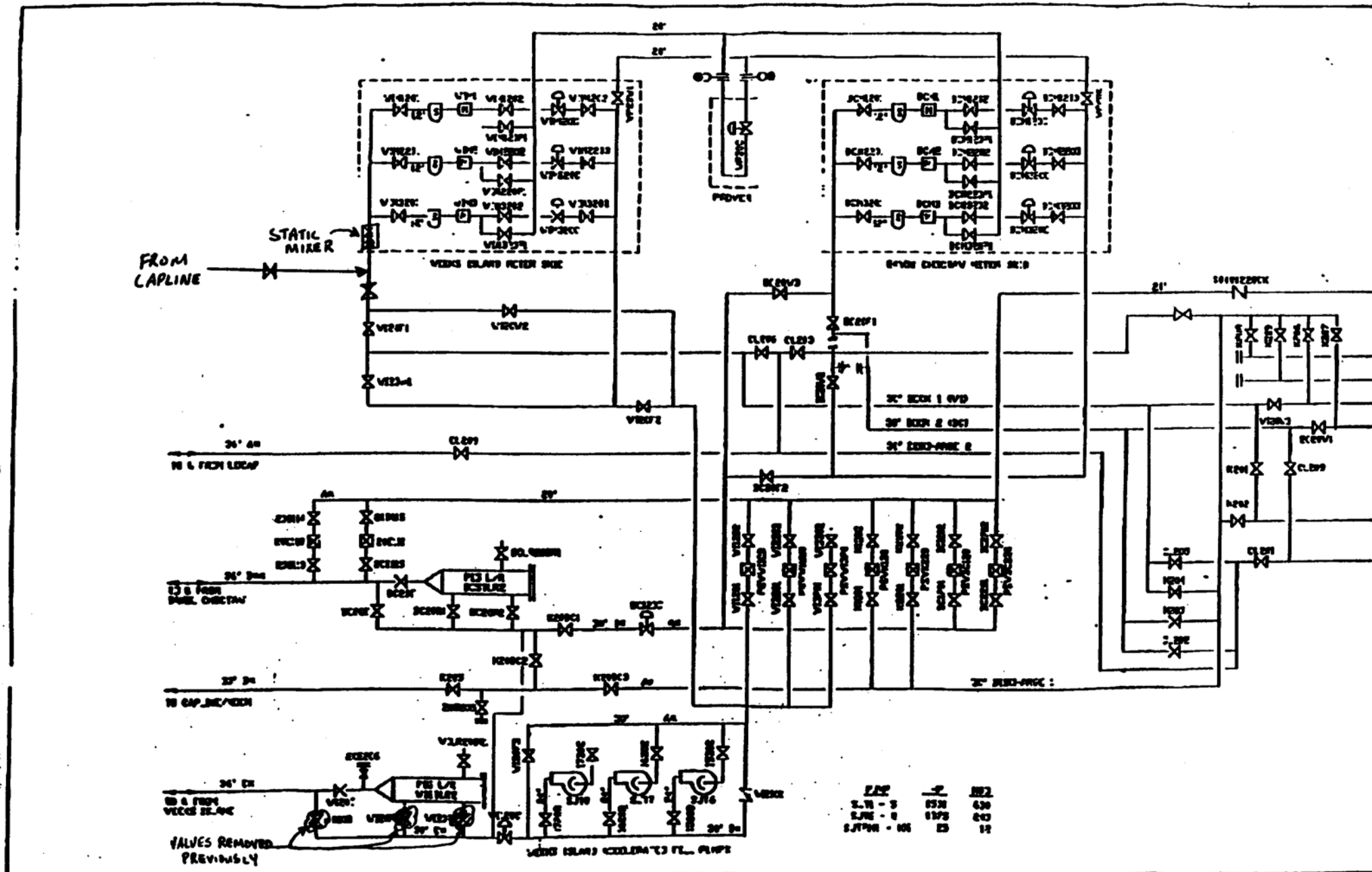

SITE OPERATIONS MANUAL

CRUDE OIL LINEUP SHEET

APPENDIX A
LINEUP SHEETS
(Sheet 2)

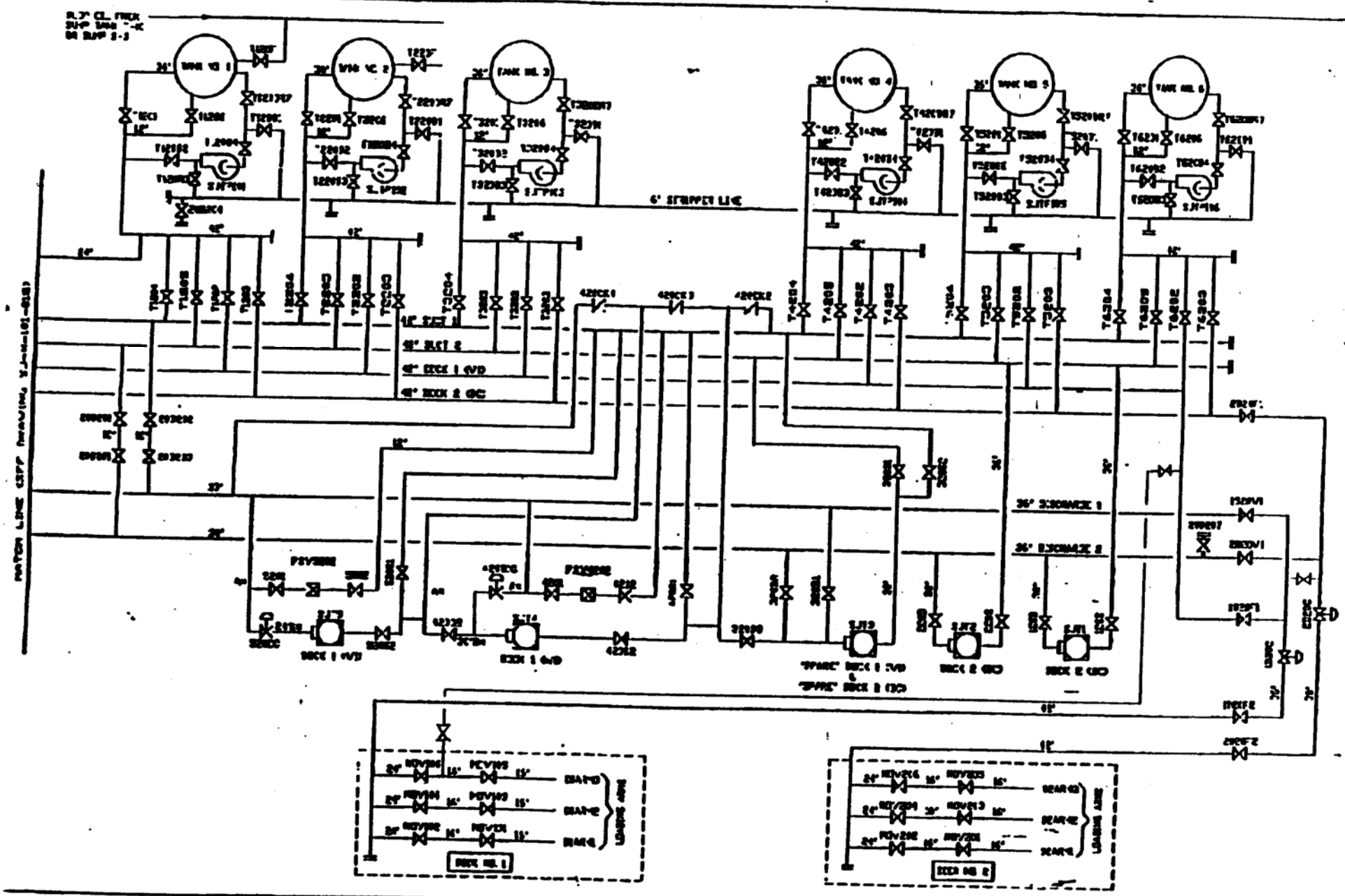

2	REVISED FOR GEN SPACE	ESP	SAD	CAC	JC	3/24/95
1	DWG MADE ONE 2 SHTS, ADDED FIG SHTS VALVES	ESP	JFS	GAE	JCK	6/29/94
0	RELEASED FOR OPS MANUAL	ESP	[illegible]	[illegible]	[illegible]	[illegible]

SITE OPERATIONS MANUAL

CRUDE OIL LINEUP SHEET

OFFICE OF ENGINEERING AND CONSTRUCTION

STRATEGIC PETROLEUM RESERVE

PROCESS

From: Thompson ML (Michael) at MSXSOPC[SMTP:MT078588@MSXSOPC.shell.com]
Sent: Thursday, August 06, 1998 3:24 PM
To: 'Sigur,Patricia'
Subject: Breakdown of Estimated Cost for Debottlenecking ECP

Pat,

The work is broken down into three separate activities based on what they will allow us to do within the terminal. In simple terms, most of the cost is associated with new valves and piping within the terminal. A small amount (about $130,000) is for modification of Dock 1. This $130,000 is included in the "BARGE LINE" cost shown below. This ECP does NOT include money for a vapor recovery unit. There are no plans to add vapor recovery at this time.

The details for each of the phases of the project is shown below.

BARGE LINE

The estimate for the barge line includes dock modifications, testing of the effluent line, tie ins at the dock and terminal for the effluent line, installation of a static mixer on the Weeks Island meter skid, and a connection near the pig traps.

Cost: $475,000

MODIFICATIONS FOR REDSTICK

This estimate is for the connection to tightline from the Texaco and Ship Shoal lines to Redstick, and overhaul of one of the Accelerated Fill Pumps because Ship Shoal and Texaco do not put up enough pressure to go all the way to Placid. Also needed for Redstick are the static mixer on the Weeks Island meter skid and a connection near the pig traps, but these two items are included in the cost of the Barge Line.

Cost: $400,000