STRATEGIC PETROLEUM RESERVE

ENGINEERING CHANGE PROPOSAL

SUMMARY SHEET

CLASS I CHANGE

ECP NUMBER	TITLE
SJ-M/O-4607	Dock Receipt/Capline Delivery Improvements

BUDGET SOURCE

- ☐ SPR BLI _____
- ☐ CONTRACTOR BASELINE
- ☐ BCR
- ☒ OTHER SPLC

AUTHORITY

☐ PCCB ☐ ECC

SCHEDULE

☐ YES

MILESTONE NUMBER _____

CMCR NUMBER _____

☒ NO

TOTAL ESTIMATED COST OF CHANGE

	FY 98	FY	FY
DESIGN			
CONSTRUCTION / M&O	$125,000		
TOTAL	$125,000		

PCCB / ECC SIGNATURES	DISPOSITION: CONCUR	DISPOSITION: NON CONCUR	DISPOSITION: DATE	COMMENTS CONDITIONS / LIMITATIONS
DOE SENIOR SITE OFFICIAL			2-17-98	
APM TECHNICAL ASSURANCE			2/20/98	
APM SYSTEMS AND PROJECTS	X		2/20/98	
APM MAINTENANCE AND OPERATIONS	✓		2/20/98	
DEPUTY PROJECT MANAGER				
DOE CMO				2/20/98
PROJECT MANAGER				
DEPUTY ASSISTANT SECRETARY-SPR				

PCCB / ECC ACTION

☑ FULL APPROVAL ☐ CONDITIONAL / LIMITED APPROVAL ☐ DISAPPROVAL

D-882

STRATEGIC PETROLEUM RESERVE

ENGINEERING CHANGE PROPOSAL

ECP NUMBER: SJ-M/O-4607	ECP TITLE: Dock Receipt/Capline Delivery Improvements	PAGE 1 OF 1
CONTRACTOR CHANGE NO. / REV.	INITIATED BY: Mike Thompson — DATE: 1/22/98	SUBMITTED BY: Mike Thompson — DATE: 1/22/98
PRIORITY: ☐ EMERGENCY ☐ URGENT ☒ ROUTINE	ORG./CONTRACTOR: Shell Oil Products Co. — PHONE NO.: (713)241-1937	ORG./CONTRACTOR — PHONE NO.
	VALUE ENGINEERING: ☐ VEP (MANDATORY) ☐ VECP (VOLUNTARY)	DRAWDOWN CRITICAL: ☐ YES ☒ NO
		ROM ESTIMATE: $ 125,000

DESCRIPTION:
PROBLEM / EXISTING CONFIGURATION

The existing piping at the Sugarland Terminal does not permit oil to be received from the docks and delivered to Capline at the same time.

PROPOSED SOLUTION / ENHANCEMENT

A new connection will be installed between line SJ-30-CR-1060-A and the inlet to the Weeks Island meter station. See the attached P&ID and valve chart for details of the connection.

REASON / JUSTIFICATION

Expected business in 1998 will require Shell to receive from the docks while making deliveries to Capline.

CI'S AFFECTED

TECHNICAL ANALYSIS / RECOMMENDATION

IMPLEMENTATION METHOD
☐ SUBCONTRACT
☐ M&O LABOR (LOE)
☐ COMBINATION

ENGINEERING	DATE	DOE SSR	DATE	
M J Thompson	2/18/98	James M. Green	2-17-98	☒ CONCUR ☐ NONCONCUR

D-655

SJT-6/7/8
ACCELERATED FILL PUMPS

CAPACITY: 240,000 BPD (7000 GPM) @ 742 FT. TDH
ACE PRESSURE: 273 PSIG @ 0 PSIG SUCTION, SG 0.85
DRIVER: 1375 HP, 3570 RPM, 4160 V.

NOTES:
1. FOR SYMBOLS AND LEGENDS SEE DRAWINGS [illegible]
2. FOR PUMP INSTRUMENTATION, SEE DWG SJ-M-103-024
3. FOR MOV INSTRUMENTATION SEE DWG SJ-M-103-025
4. SEE DWG. SJ-M-103-026 FOR NITROGEN OPERATED RELIEF VALVE SYSTEM.
5. FOR PUMP AUXILIARIES, SEE DWG SJ-M-103-036
6. ONLY PRIMARY INSTRUMENTS WERE FIELD VERIFIED.
7. SITE CHECK DATES 11/14 - 11/20/92, 12/1 - 12/3/92.

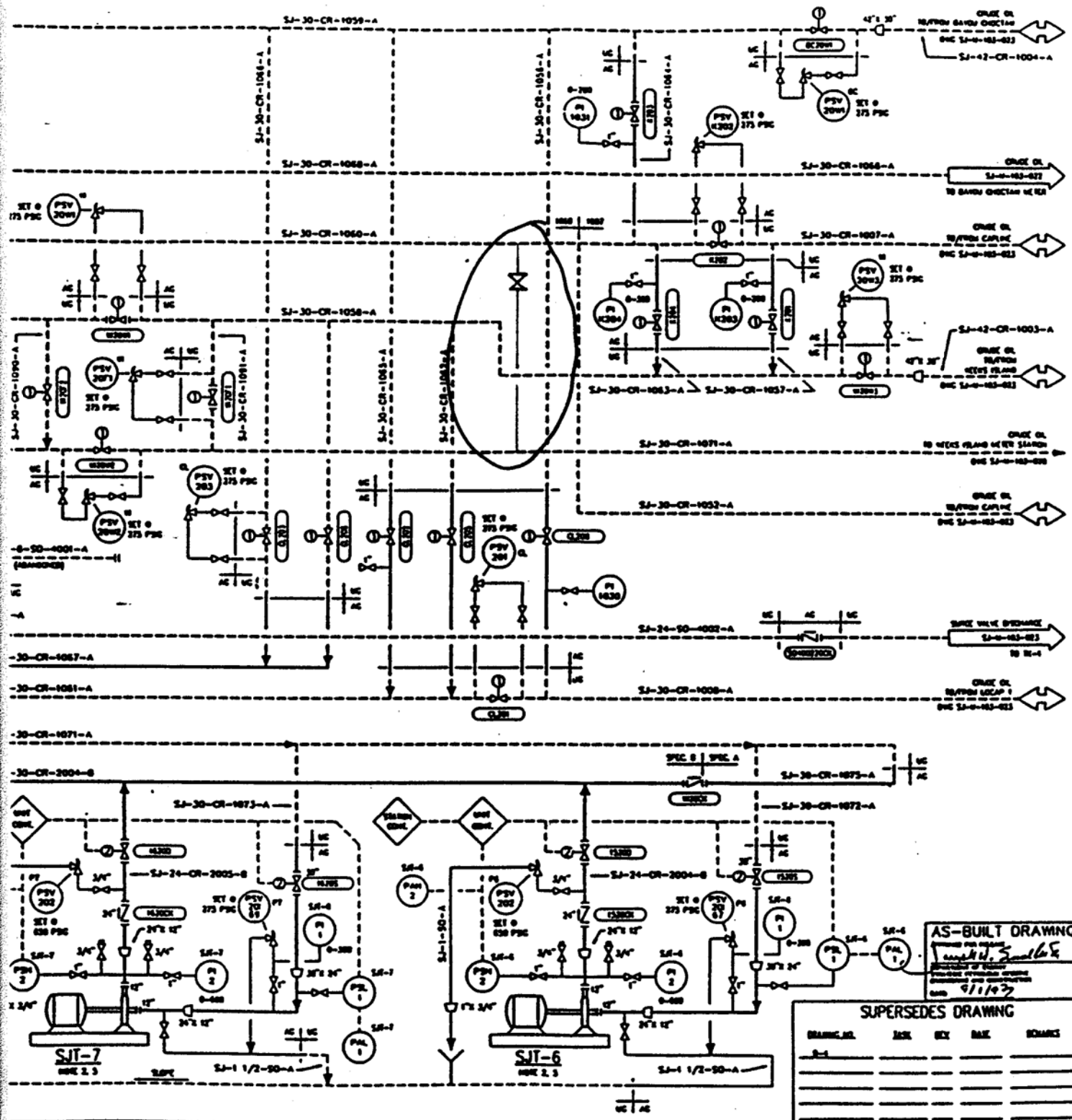

PIPING & INSTRUMENT DIAGRAM	OFFICE OF ENGINEERING AND CONSTRUCTION	DISCIPLINE: MECHANICAL	
PIPELINE SURGE CONTROL & W.I. ACCELERATED FILL PUMPS STJ-6/7/8	STRATEGIC PETROLEUM RESERVE	SCALE: NONE	
ST. JAMES TERMINAL ST. JAMES PARISH, LOUISIANA		SJ-M-103-019	REV 0

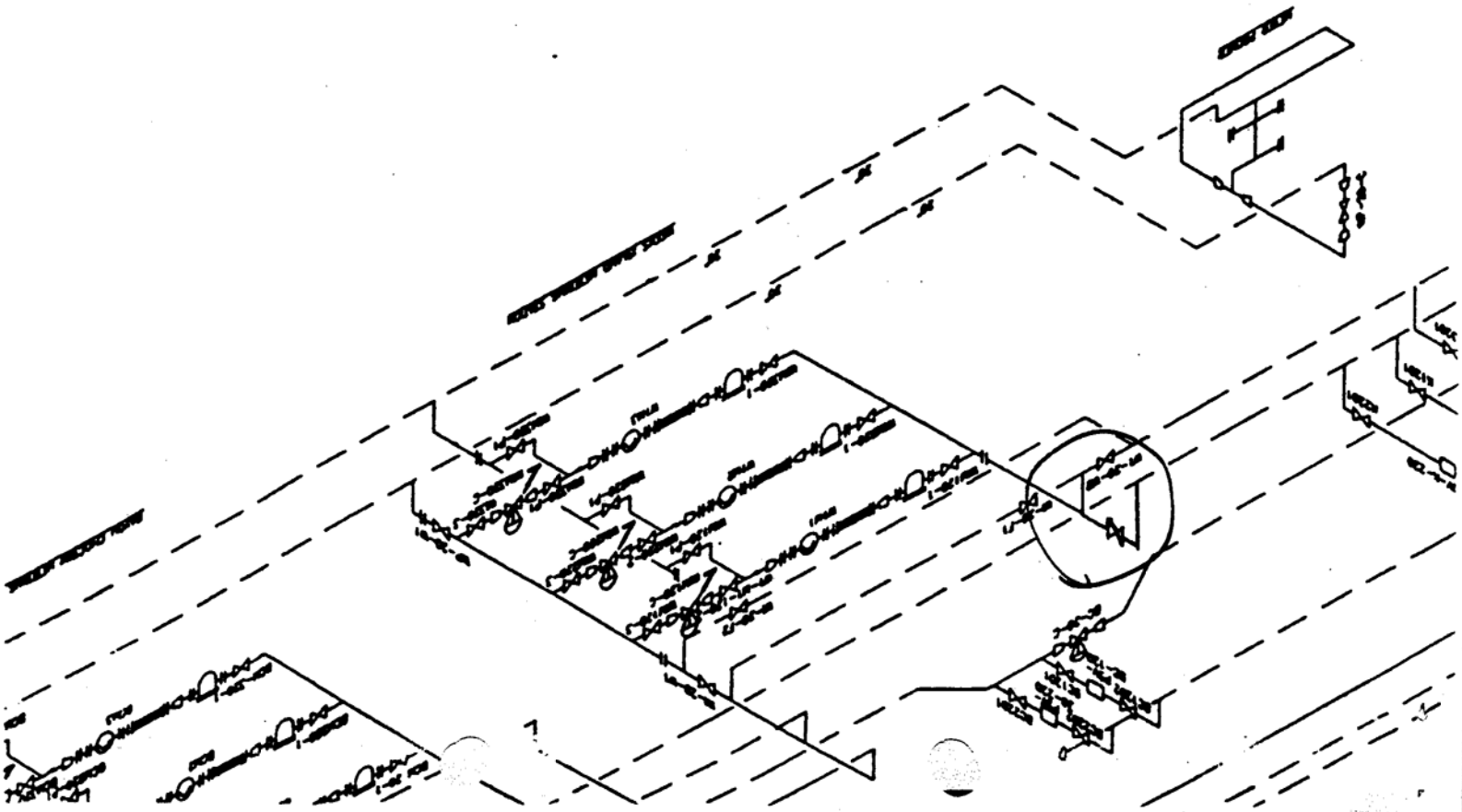

STRATEGIC PETROLEUM RESERVE
ENGINEERING CHANGE PROPOSAL
CONFIGURATION CHANGE AFFECTED REPORT

TO BE COMPLETED BY TECHNICAL REVIEW PROCESS, ENGINEERING AND CONFIGURATION MANAGEMENT ORGANIZATION DEFINED PROCESS

ECP NO.	CONTRACTOR CHANGE NO.	REV.	CHANGE CLASSIFICATION
	74-008		☒ CLASS I ☐ CLASS II PAGE 2 OF

FUNCTIONS AFFECTED

YES/NO	ITEM
NO	LEVEL I ☐ LEVEL II ☐ CRITERIA
NO	PERFORMANCE CRITERIA
NO	RAM
NO	INTERFACE CHARACTERISTICS
NO	I/O POINTS
NO	DOE LEVEL I, II, III SCHEDULES
NO	GUARANTEES/DELIVERABLES
NO	SAFETY/ENV/FP (CIRCLE ONE)
NO	SECURITY REQUIREMENTS
~~NO~~ yes	OPCS SOFTWARE
NO	OPCS HARDWARE
~~NO~~ yes	OPCS FIRMWARE
NO	SETPOINTS/RANGES
NO	DIP SWITCH SETTINGS/JUMPERS
NO	MASTER CI LIST
NO	WELLHEAD CONFIGURATION
~~NO~~ yes	SPARES/PROVISIONING REQUIREMENTS
NO	GOVERNMENT FURNISHED EQUIPMENT
NO	ENERGY USAGE
~~NO~~ yes	OPERATIONS MODELS
NO	OTHER

DOCUMENTS AFFECTED

YES/NO	ITEMS
	PIPING
~~NO~~ yes	101 - PROCESS FLOW DIAGRAMS
~~NO~~ yes	102 - MECHANICAL FLOW DIAGRAMS
~~NO~~ yes	103 - PIPING AND INSTRUMENTATION DIAGRAMS (P&ID'S)
NO	104 - UTILITY FLOW DIAGRAMS
~~NO~~ yes	105 - GENERAL PIPING PLANS
~~NO~~ yes	106 - AREA PLANS (MECHANICAL EQUIPMENT LOCATION)
NO	122 - WELL HEAD DRAWINGS
~~NO~~ yes	130 - VALVE LIST
NO	135 - LINE LIST
NO	140 - PSV LIST
NO	150 - STANDARDS
	CIVIL/STRUCTURAL
NO	201 - PLOT PLANS
NO	202 - SITE WORK: GRADING (ROUGH & FINISH) DRAIN FENCING
NO	210 - FOUNDATIONS: LOCATION PLANS
NO	216 - MINES (WEEKS ISLAND ONLY)
NO	250 - STANDARDS
	ELECTRICAL
NO	301 - AREA CLASSIFICATION
NO	302 - ONE LINE DIAGRAMS
NO	303 - SCHEMATIC DIAGRAMS
NO	304 - POWER PLANT AND DETAILS
NO	305 - LIGHTING PLANT AND DETAILS
NO	307 - SUBSTATION PLANS AND DETAILS
~~NO~~ yes	308 - WIRING DIAGRAMS
NO	310 - GROUNDING
~~NO~~ yes	311 - CONDUIT & CABLE SCHEDULES (INCLUDING INST.)
NO	313 - MCC/SWITCH GEAR EVALUATION & SCHEDULE

DOCUMENTS AFFECTED

YES/NO	ITEM
	ELECTRICAL (cont'd)
NO	315 - CATHODIC PROTECTION
NO	350 - STANDARDS
	INSTRUMENTATION
NO	401 - BLOCK DIAGRAM
~~NO~~ yes	402 - LOOP DIAGRAMS
NO	403 - INSTRUMENT PLANS
NO	404 - INSTRUMENT WIRING DIAGRAM
~~NO~~ yes	409 - INSTRUMENT INDEX
NO	450 - STANDARDS
	MAPPING
NO	501 - ALIGNMENT SHEETS
NO	509 - PIPELINE DRWGS (MAINLINE VALVES, DRIPS, SCRAPER, TRAPS, ETC.)
NO	550 - STANDARDS
	ARCHITECTURAL
NO	720 - ELEVATIONS AND FLOOR PLANS
NO	750 - STANDARDS
	DOCUMENTATION
NO	900 - RESERVED
NO	901 - TECHNICAL/PERFORMANCE/DESIGN CRITERIA
~~NO~~ yes	910 - DESIGN DESCRIPTION/BASIS
~~NO~~ yes	911 - PROCESS SET POINT DOCUMENTS
~~NO~~ yes	912 - EQUIPMENT LIST
NO	913 - MOV LIST
NO	915 - ELECTRICAL SAFETY
~~NO~~ yes	920 - I/O DOCUMENT
~~NO~~ yes	930 - OPERATIONS MANUALS
~~NO~~ yes	930 - MAINTENANCE MANUALS
NO	950 - STANDARD SPECIFICATIONS
NO	970 - TASK SPECIFICATIONS
NO	990 - CONFIGURATION MANAGEMENT REPORTS/I.B.M.

COMMENTS:

ENGINEERING	DATE	CONFIGURATION MANAGEMENT	DATE
		[illegible]	3/9/98

EH 3/16/98

W:\E&C_STDS\FORMS\ECP.DOT