STRATEGIC PETROLEUM RESERVE PROJECT PROPOSAL

(M&O CONTRACTOR FORM)

SITE(S) AFFECTED: SJ

CONTRACTOR CHANGE NO.: 74007 | REV: 1

☒ ENGINEERING CHANGE:
☐ OTHER: (ADMIN/NON-ENGR. CHNG)

ECP NO.:

SECTION I - SUMMARY INFORMATION

TITLE: CONNECTION TO EXXON SHIP SHOAL AND TEXACO PIPELINES

SPONSOR: M. THOMPSON SHELL
ORG:.
PHONE:

RECOMMENDED RANK: 07

FUNDING/SCHEDULE IMPACT			
SOURCE	TOTAL ESTIMATED COST	SCHEDULING	AUTHORITY
☐ SPR BLI _____	FY ____ ____ ____	☐ NO IMPACT	☐ PCCB ☐ CLASS I
☐ CONTRACTOR BASELINE		☐ NEW SCHEDULE REQ'D.	☐ ECC ☐ CLASS II
☐ O&M	DESIGN ____ ____ ____	☐ SCHEDULE CHANGE REQ'D.	☐ CONTRACTOR
☐ LE	CONSTRUCTION/ IMPLEMENTATION ____ ____ ____	☐ MILESTONE _____	FINAL DISPOSITION
☐ MM		☐ CMCR NO. _____	☐ APPROVE
☐ OTHER _____	TOTAL: ____ ____ ____		☐ CONDITIONAL APPROVAL
☐ BCR			☐ DISAPPROVE
			☐ CANCEL

SECTION II - DYNMcDERMOTT REVIEW AND APPROVAL (CLASS II)

REVIEWERS (NAME/ORG.)	CONCURRENCE YES	NO	COMMENTS:
SITE MANAGER	☐	☐	
SITE ENGINEER	☐	☐	
	☐	☐	
	☐	☐	
	☐	☐	
	☐	☐	
	☐	☐	
	☐	☐	
	☐	☐	
	☐	☐	
	☐	☐	

TRB CHAIRMAN: R K Hughes	DATE: 5/14/98	DISPOSITION: ☑ CONCUR ☐ APPROVE ☐ DISAPP. ☐ CANCEL	COMMENTS
O&M PROJECTS COORDINATOR: Tony Garner	DATE: 5/14/98	DISPOSITION: ☑ CONCUR ☐ APPROVE ☐ DISAPP. ☐ CANCEL	

TRBSUM2.DOT

E4

STRATEGIC PETROLEUM RESERVE PROJECT PROPOSAL

(M&O CONTRACTOR FORM)

SITE(S) AFFECTED:	SJ
CONTRACTOR CHANGE NO.:	74007
REV:	1
☒ ENGINEERING CHANGE:	
☐ OTHER: (ADMIN/NON-ENGR. CHNG)	
ECP NO.:	

SECTION I - SUMMARY INFORMATION

TITLE: CONNECTION TO EXXON SHIP SHOAL AND TEXACO PIPELINES

SPONSOR: M. THOMPSON SHELL

ORG:.

PHONE:

RECOMMENDED RANK: 07

FUNDING/SCHEDULE IMPACT

SOURCE	TOTAL ESTIMATED COST	SCHEDULING
☐ SPR BLI _____	FY _____ _____ _____	☐ NO IMPACT
☐ CONTRACTOR BASELINE		☐ NEW SCHEDULE REQ'D.
☐ O&M	DESIGN _____ _____ _____	☐ SCHEDULE CHANGE REQ'D.
☐ LE	CONSTRUCTION/ IMPLEMENTATION _____ _____ _____	☐ MILESTONE _____
☐ MM		☐ CMCR NO. _____
☐ OTHER _____	TOTAL: _____ _____ _____	
☐ BCR		

AUTHORITY

☒ PCCB ☒ CLASS I
☐ ECC ☐ CLASS II
☐ CONTRACTOR

FINAL DISPOSITION

☐ APPROVE
☐ CONDITIONAL APPROVAL
☐ DISAPPROVE
☐ CANCEL

SECTION II - DYNMcDERMOTT REVIEW AND APPROVAL (CLASS II)

REVIEWERS (NAME/ORG.)	CONCURRENCE YES	CONCURRENCE NO	COMMENTS:
SITE MANAGER	☐	☐	
SITE ENGINEER	☐	☐	
Raymond A Gonte	X	☐	
	☐	☐	
	☐	☐	
	☐	☐	
	☐	☐	
	☐	☐	
	☐	☐	
	☐	☐	Note: Software Review during TRB Review
	☐	☐	and not via transmittal P. before TRB Meeting

	DATE	DISPOSITION	COMMENTS
TRB CHAIRMAN: R K Hughes	5/14/98	☒ CONCUR ☐ APPROVE ☐ DISAPP. ☐ CANCEL	
O&M PROJECTS COORDINATOR: Tony Garner	5/14/98	☒ CONCUR ☐ APPROVE ☐ DISAPP. ☐ CANCEL	

TRBSUM2.DOT

E4

STRATEGIC PETROLEUM RESERVE
PROJECT PROPOSAL

(M&O CONTRACTOR FORM)

SITE(S) AFFECTED: SJ

CONTRACTOR CHANGE NO.: 74007 | REV: 1

☒ ENGINEERING CHANGE:
☐ OTHER: (ADMIN/NON-ENGR. CHNG)

ECP NO.:

TITLE: CONNECTION TO EXXON SHIP SHOAL AND TEXACO PIPELINES

SPONSOR: M. THOMPSON SHELL

ORG:.

PHONE:

RECOMMENDED RANK: 07

FUNDING/SCHEDULE IMPACT		
SOURCE	TOTAL ESTIMATED COST	SCHEDULING
☐ SPR BLI _____	FY ___ ___ ___	☐ NO IMPACT
☐ CONTRACTOR BASELINE	DESIGN ___ ___ ___	☐ NEW SCHEDULE REQ'D.
☐ O&M	CONSTRUCTION/ IMPLEMENTATION ___ ___ ___	8pb¼ ☒ SCHEDULE CHANGE REQ'D.
☐ LE	TOTAL: ___ ___ ___	☐ MILESTONE _____
☐ MM		rÓ1Ã ☒ CMCR NO. _____
☐ OTHER _____		
☐ BCR		

REVIEWERS (NAME/ORG.)	CONCURRENCE YES	CONCURRENCE NO	COMMENTS: 1+1
SITE MANAGER: Brian [signature]	☒	☐	â â
SITE ENGINEER: Tony Bradra	☒	☐	
	☐	☐	¼
	☐	☐	
	☐	☐	
	☐	☐	
	☐	☐	
	☐	☐	
	☐	☐	
Á	☐	☐	Á
	☐	☐	

	DATE	DISPOSITION	COMMENTS
TRB CHAIRMAN: D K Hughes	5/14/98	☒ CONCUR ☐ APPROVE ☐ DISAPP. ☐ CANCEL	
O&M PROJECTS COORDINATOR: Tony Gamer	5/14/98	☒ CONCUR ☐ APPROVE ☐ DISAPP. ☐ CANCEL	

TRBSUM2.DOT

E4

0â

AUG-17-98 02:04 PM DM ADMIN BC SITE 504 687 4388 281 P.02

STRATEGIC PETROLEUM RESERVE

ENGINEERING CHANGE PROPOSAL

SUMMARY SHEET
CLASS I CHANGE

ECP NUMBER	TITLE
SJ-M/O-4606 Revision 1	Connection to EXXON, SHIP SHOAL and TEXACO PIPELINES

BUDGET SOURCE

- ☐ SPR BLI _____
- ☐ CONTRACTOR BASELINE
- ☐ BCR
- ☐ OTHER _____

AUTHORITY

■ PCCB ☐ ECC

SCHEDULE

- ☐ YES
  - MILESTONE NUMBER _____
  - CMCR NUMBER _____
- ☒ NO

TOTAL ESTIMATED COST OF CHANGE

	FY	FY	FY
DESIGN			
CONSTRUCTION / M&O			
TOTAL	100,000		

PCCB / ECC SIGNATURES	DISPOSITION: CONCUR	DISPOSITION: NON CONCUR	DISPOSITION: DATE	COMMENTS CONDITIONS / LIMITATIONS
DOE SENIOR SITE OFFICIAL				
APM TECHNICAL ASSURANCE	✓		4/12	
APM SYSTEMS AND PROJECTS	✓		4/15/98	
APM MAINTENANCE AND OPERATIONS	✓		4/15/98	
DEPUTY PROJECT MANAGER				
DOE CMO				4/15/98
PROJECT MANAGER				
DEPUTY ASSISTANT SECRETARY-SPR				

PCCB / ECC ACTION

☑ FULL APPROVAL ☐ CONDITIONAL / LIMITED APPROVAL ☐ DISAPPROVAL

D-882

STRATEGIC PETROLEUM RESERVE

WR #

ENGINEERING CHANGE PROPOSAL

ECP NUMBER	ECP TITLE	PAGE 1 OF
SJ-M/0-4606 Revision 1	Connection to Exxon, Ship shoal, and Texaco Pipelines	

CONTRACTOR CHANGE NO./REV.	INITIATED BY	DATE	SUBMITTED BY	DATE
REV 1 74.007	Mike Thompson	4/11/98	Mike Thompson	4/11/98
	ORG./CONTRACTOR: Shell Oil	PHONE NO.	ORG./CONTRACTOR	PHONE NO.

PRIORITY

- ☐ EMERGENCY
- ☐ URGENT
- ☒ ROUTINE

VALUE ENGINEERING	DRAWDOWN CRITICAL	ROM ESTIMATE
☐ VEP (MANDATORY)	☐ YES	$ 100,000
☐ VECP (VOLUNTARY)	☒ NO	

DESCRIPTION:

PROBLEM / EXISTING CONFIGURATION

The original plan was to tie the new line in near the suction of pumps SJT-6/7/8. The new plan will make the tie in on the inlet side of the Bayou Choctaw meters. We will also use an abandond 30" line that DOE installed. According to Scott Landry, DM, this was one of two lines intended for a connection to Capline, but was abandoned before being put in service. We will inspect and hydrotest the 30" line before placing it in service. Because the flow rates from the Exxon pipeline are low (approximately 3500 BPH), we will also need to replace one of the 12" turbine meters in the Bayou Choctaw meter skid with an 8" helical turbine flow meter. This will reduce the maximum flow rate through the meter skid from 64,200 BPH to 49,000 BPH. I believe this is still higher than the maximum drawdown rate from Bayou Choctaw. We plan to keep the 12" turbine meter in the warehouse and can replace it in the meter skid with 1 to 2 days notice if needed.

= 1.176MMBD

PROPOSED SOLUTION / ENHANCEMENT

REASON / JUSTIFICATION

CI'S AFFECTED

TECHNCIAL ANALYSIS/RECOMMENDATION

IMPLEMENTATION METHOD

- ☐ SUBCONTRACT
- ☑ M&O LABOR (LOE)
- ☐ COMBINATION

ENGINEERING	DATE	DOE SSR	DATE
Michael L. Thompson	4/15/98	James M. Green	4-23-98 ☒ CONCUR ☐ NONCONCUR

D-655

W:\E&C_STDS\FORMS\ECP.DOT

STRATEGIC PETROLEUM RESERVE

ENGINEERING CHANGE PROPOSAL

SUMMARY SHEET

CLASS I CHANGE

ECP NUMBER	TITLE
SJ-M/O-4606	Connection to Exxon, Ship Shoal, and Texaco Pipelines

BUDGET SOURCE

- ☐ SPR BLI _____
- ☐ CONTRACTOR BASELINE
- ☐ BCR
- ☒ OTHER SPLC

AUTHORITY

☒ PCCB ☐ ECC

SCHEDULE

- ☐ YES
  - MILESTONE NUMBER _____
  - CMCR NUMBER _____
- ☒ NO

TOTAL ESTIMATED COST OF CHANGE

	FY 98	FY	FY
DESIGN			
CONSTRUCTION / M&O	$110,00- $110,000		
TOTAL			

PCCB / ECC SIGNATURES	DISPOSITION: CONCUR	NON CONCUR	DATE	COMMENTS CONDITIONS / LIMITATIONS
DOE SENIOR SITE OFFICIAL	✓		2/17/98	
APM TECHNICAL ASSURANCE	X		2/20/98	
APM SYSTEMS AND PROJECTS	X		2/20/98	
APM MAINTENANCE AND OPERATIONS	✓		2/20/98	
DEPUTY PROJECT MANAGER				
DOE CMO				2/20/98
PROJECT MANAGER				
DEPUTY ASSISTANT SECRETARY-SPR				

PCCB / ECC ACTION

☒ FULL APPROVAL ☐ CONDITIONAL / LIMITED APPROVAL ☐ DISAPPROVAL

D-882

STRATEGIC PETROLEUM RESERVE

ENGINEERING CHANGE PROPOSAL

ECP NUMBER: SJ-M/O-4606	ECP TITLE: Connection to Exxon, Ship Shoal, and Texaco Pipelines	PAGE 1 OF 1
CONTRACTOR CHANGE NO. / REV.: 74 007 R1	INITIATED BY: Mike Thompson — DATE: 1/22/98	SUBMITTED BY: Mike Thompson — DATE: 1/22/98
PRIORITY: ☐ EMERGENCY ☐ URGENT ☒ ROUTINE	ORG./CONTRACTOR: Shell Oil Products Co. — PHONE NO.: (713)241-1937	ORG./CONTRACTOR — PHONE NO.
	VALUE ENGINEERING: ☐ VEP (MANDATORY) ☐ VECP (VOLUNTARY)	DRAWDOWN CRITICAL: ☐ YES ☒ NO
		ROM ESTIMATE: $ 110,000

DESCRIPTION:
PROBLEM / EXISTING CONFIGURATION

Shell desires to receive oil from the Exxon, Ship Shoal, and Texaco pipelines at the Capline terminal into the Sugarland Terminal while also making deliveries to Capline.

(1000')

PROPOSED SOLUTION / ENHANCEMENT

A new pipeline will be laid between the Capline and Sugarland Terminals. The line will connect to the Exxon, Ship Shoal, and Texaco pipelines on Capline property. The tie-in to Sugarland will be made into line SJ-30-CR-1015-A near the suction of pumps SJT-6/7/8. See the attached P&ID and Valve Chart for details.

REASON / JUSTIFICATION

The ability to receive from and deliver to Capline at the same time is required for expected 1998 business.

CI'S AFFECTED

TECHNICAL ANALYSIS / RECOMMENDATION

IMPLEMENTATION METHOD
☐ SUBCONTRACT
☐ M&O LABOR (LOE)
☐ COMBINATION

ENGINEERING	DATE	DOE SSR	DATE	
[signature]	2/18/98	James M. [signature]	2-17-98	☒ CONCUR ☐ NONCONCUR

D-655

STRATEGIC PETROLEUM RESERVE
ENGINEERING CHANGE PROPOSAL
CONFIGURATION CHANGE AFFECTED REPORT

TO BE COMPLETED BY TECHNICAL REVIEW PROCESS, ENGINEERING AND CONFIGURATION MANAGEMENT ORGANIZATION DEFINED PROCESS

ECP NO.	CONTRACTOR CHANGE NO.	REV.	CHANGE CLASSIFICATION
SJ-m/0-4606	74-007	1	☒ CLASS I ☐ CLASS II

FUNCTIONS AFFECTED

YES/NO	ITEM
~~NO~~ YES	LEVEL I ☐ LEVEL II ☒ CRITERIA
NO	PERFORMANCE CRITERIA
NO	RAM
NO	INTERFACE CHARACTERISTICS
NO	I/O POINTS
NO	DOE LEVEL I, II, III SCHEDULES
NO	GUARANTEES/DELIVERABLES
NO	SAFETY/ENV/FP (CIRCLE ONE)
NO	SECURITY REQUIREMENTS
~~NO~~ YES	OPCS SOFTWARE
~~NO~~	OPCS HARDWARE
~~NO~~ YES	OPCS FIRMWARE
NO	SETPOINTS/RANGES
NO	DIP SWITCH SETTINGS/JUMPERS
NO	MASTER CI LIST
NO	WELLHEAD CONFIGURATION
~~NO~~ YES	SPARES/PROVISIONING REQUIREMENTS
NO	GOVERNMENT FURNISHED EQUIPMENT
NO	ENERGY USAGE
~~NO~~ YES	OPERATIONS MODELS
NO	OTHER
	DOCUMENTS AFFECTED
YES/NO	ITEM
	PIPING
~~NO~~ YES	101 - PROCESS FLOW DIAGRAMS
~~NO~~ YES	102 - MECHANICAL FLOW DIAGRAMS
~~NO~~ YES	103 - PIPING AND INSTRUMENTATION DIAGRAMS (P&ID'S)
NO	104 - UTILITY FLOW DIAGRAMS
~~NO~~ YES	105 - GENERAL PIPING PLANS
~~NO~~ YES	106 - AREA PLANS (MECHANICAL EQUIPMENT LOCATION)
NO	122 - WELL HEAD DRAWINGS
~~NO~~ YES	130 - VALVE LIST
NO	135 - LINE LIST
NO	140 - PSV LIST
NO	150 - STANDARDS
	CIVIL/STRUCTURAL
NO	201 - PLOT PLANS
NO	202 - SITE WORK: GRADING (ROUGH & FINISH) DRAIN FENCING
NO	210 - FOUNDATIONS: LOCATION PLANS
NO	216 - MINES (WEEKS ISLAND ONLY)
NO	250 - STANDARDS
	ELECTRICAL
NO	301 - AREA CLASSIFICATION
NO	302 - ONE LINE DIAGRAMS
NO	303 - SCHEMATIC DIAGRAMS
NO	304 - POWER PLANT AND DETAILS
NO	305 - LIGHTING PLANT AND DETAILS
NO	307 - SUBSTATION PLANS AND DETAILS
~~NO~~ YES	308 - WIRING DIAGRAMS
NO	310 - GROUNDING
~~NO~~ YES	311 - CONDUIT & CABLE SCHEDULES (INCLUDING INST.)
NO	313 - MCC/SWITCH GEAR EVALUATION & SCHEDULE

DOCUMENTS AFFECTED

YES/NO	ITEM
	ELECTRICAL (cont'd)
NO	315 - CATHODIC PROTECTION
NO	350 - STANDARDS
	INSTRUMENTATION
NO	401 - BLOCK DIAGRAM
~~NO~~ YES	402 - LOOP DIAGRAMS
NO	403 - INSTRUMENT PLANS
NO	404 - INSTRUMENT WIRING DIAGRAM
~~NO~~ YES	409 - INSTRUMENT INDEX
NO	450 - STANDARDS
	MAPPING
NO	501 - ALIGNMENT SHEETS
NO	509 - PIPELINE DRWGS (MAINLINE VALVES, DRIPS, SCRAPER, TRAPS, ETC.)
NO	550 - STANDARDS
	ARCHITECTURAL
NO	720 - ELEVATIONS AND FLOOR PLANS
NO	750 - STANDARDS
	DOCUMENTATION
NO	900 - RESERVED
NO	901 - TECHNICAL/PERFORMANCE/DESIGN CRITERIA
~~NO~~ YES	910 - DESIGN DESCRIPTION/BASIS
~~NO~~ YES	911 - PROCESS SET POINT DOCUMENTS
~~NO~~ YES	912 - EQUIPMENT LIST
NO	913 - MOV LIST
NO	915 - ELECTRICAL SAFETY
~~NO~~ YES	920 - I/O DOCUMENT
~~NO~~ YES	930 - OPERATIONS MANUALS
~~NO~~ YES	930 - MAINTENANCE MANUALS
NO	950 - STANDARD SPECIFICATIONS
NO	970 - TASK SPECIFICATIONS
NO	990 - CONFIGURATION MANAGEMENT REPORTS/I.B.M.

COMMENTS:

ENGINEERING DATE

CONFIGURATION MANAGEMENT [signature] DATE 5/28/98 EH 5/29/98

[signature] 3/3/98

EH 3/3/98

W:\E&C_STDS\FORMS\ECP DOT

SJT-6/7/8

ACCELERATED FILL PUMPS

CAPACITY: 240,000 BPD (7000 GPM) @ 742 FT. TDH
PRESSURE: 273 PSIG @ 0 PSIG SUCTION, SG 0.85
DRIVER: 1375 HP, 3570 RPM, 4160 V

NOTES:

1. FOR SYMBOLS AND LEGENDS SEE DRAWING MS-M-150-001/002/003
2. FOR PUMP INSTRUMENTATION, SEE DWG SJ-M-103-034
3. FOR MOV INSTRUMENTATION SEE DWG SJ-M-103-035
4. SEE DWG SJ-M-103-036 FOR HYDROCON OPERATED RELIEF VALVE SYSTEM.
5. FOR PUMP AUXILIARIES, SEE DWG SJ-M-103-036
6. ONLY PRIMARY INSTRUMENTS WERE FIELD VERIFIED
7. SITE CHECK DATES 11/14 - 11/20/92, 12/1 - 12/3/92

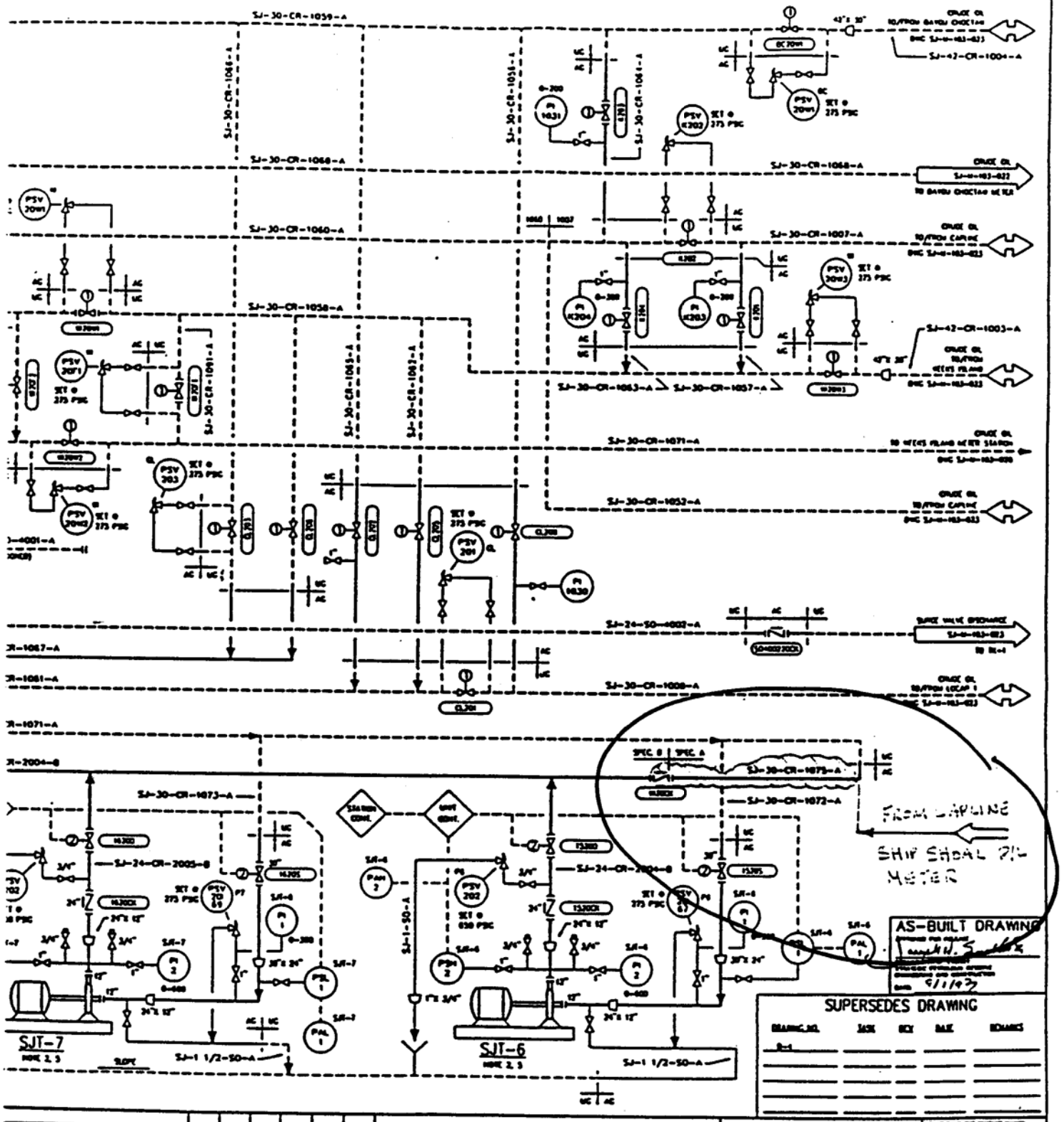

AS-BUILT DRAWING

9/1/93

SUPERSEDES DRAWING

DRAWING NO.	TASK	REV	DATE	REMARKS

PIPING & INSTRUMENT DIAGRAM

PIPELINE SURGE CONTROL & W.I.
ACCELERATED FILL PUMPS STJ-6/7/8

ST. JAMES TERMINAL
ST. JAMES PARISH, LOUISIANA

OFFICE OF ENGINEERING AND CONSTRUCTION

STRATEGIC PETROLEUM RESERVE

MECHANICAL

NONE

SJ-M-103-019

REV 0