STRATEGIC PETROLEUM RESERVE

ENGINEERING CHANGE PROPOSAL

SUMMARY SHEET
CLASS I CHANGE

ECP NUMBER	TITLE:
SJ-M/O-4626	**Disable Oil Stop Valve**

BUDGET SOURCE	AUTHORITY	
☐ SPR BLI ____ ☐ CONTRACTOR BASELINE ☐ BCR ☐ OTHER	☒ PCCB	☐ ECC

SCHEDULE	TOTAL ESTIMATED COST OF CHANGE	FY	FY	FY
☐ YES MILESTONE NUMBER ____ CMCR NUMBER ____ ☐ NO	DESIGN	____	____	____
	CONSTRUCTION/M&O	____	____	____
	TOTAL	____	____	____

PCCB / ECC SIGNATURES	DISPOSITION: CONCUR	DISPOSITION: NON CONCUR	DISPOSITION: DATE	COMMENTS CONDITIONS / LIMITATIONS
DOE SENIOR SITE OFFICIAL				
[signature] APM TECHNICAL ASSURANCE	✓	✓ EDK	8-10-04 EDK ~~8-20-04~~	See Billy's comments email to Wayne E.
[signature] APM SYSTEMS AND PROJECTS	✓		8/13/04	See Comments on Attached Sheets
[signature] APM MAINTENANCE AND OPERATIONS	✓		8/12/04	
[signature] APM MANAGEMENT AND ADMINISTRATION	✓		8/11/04	
DEPUTY PROJECT MANAGER				
DOE CMO	[redacted]			
PROJECT MANAGER				
DEPUTY ASSISTANT SECRETARY -SPR				

PCCB / ECC ACTION

☒ FULL APPROVAL ☐ CONDITIONAL / LIMITED APPROVAL ☐ DISAPPROVAL

ENGINEERING CHANGE PROPOSAL
LIFE CYCLE COST FORM

ECP NUMBER: SJ-M/O-4626	ECP TITLE: Disable Oil Stop Valve
EXECUTIVE SUMMARY: Disable Oil Stop Valve to prevent the sump from overflowing.	
IMPLEMENTATION PLAN:	
IMPLEMENTATION COST: DESIGN: CONSTRUCTION: TOTAL:	
LIFE CYCLE COST:	
IMPACT SUMMARY:	
LEVEL I, II, and III CRITERIA:	CONTRACT COMPLETION DATES:
CODES, REGULATIONS, PERMITS, ETC.:	GOVERNMENT-FURNISHED EQUIPMENT:
SAFETY, ENVIRONMENTAL, FIRE PROTECTION SYSTEMS, SECURITY:	SCHEDULE:

STRATEGIC PETROLEUM RESERVE

ENGINEERING CHANGE PROPOSAL

ECP NUMBER	ECP TITLE	PAGE 1 OF 4
SJ-M10-4626	Disable Oil Stop Valve	

CONTRACTOR CHANGE NO. / REV.	INITIATED BY	DATE	SUBMITTED BY	DATE
	Richard Krebs	11/10/2003	Terry Coleman	1/7/2004
	ORG / CONTRACTOR	PHONE NO.	ORG/CONTRACTOR	PHONE NO.
	Shell Pipeline Company LP	(504) 728-3573	Shell Pipeline Company LP	(504) 728-7366

PRIORITY

- ☐ EMERGENCY
- ☐ URGENT
- ☒ ROUTINE

VALUE ENGINEERING	DRAWDOWN CRITICAL	ROM ESTIMATE
☐ VEP (MANDATORY) ☐ VECP (VOLUNTARY)	☐ YES ☒ NO	$ N/A

DESCRIPTION:

PROBLEM / EXISTING CONFIGURATION

The Oil Stop Valve in the Oil Stop Valve Box SJT-V1 has malfunctioned in the past causing the Oil Sump SJT-S3 to flow.

PROPOSED SOLUTION / ENHANCEMENT

Disable the Oil Stop Valve by removing the float assembly.

REASON/JUSTIFICATION

The Oil Stop Valve is located upstream of the Dock Oil Water Separator SJT-SEP1. Its function is to prevent a solid stream of crude oil from reaching the Separator. However, when the device fails all rainwater collected on Dock #1 and #2 is routed directly to the sump. The sump liquids are pumped into tankage, affecting the crude oil quality. If the Dock Oil Water Separator SJT-SEP1 capacity is exceeded the oil will be contained in the retention pond.

CI'S AFFECTED

TECHNICAL ANALYSIS/RECOMMENDATION

IMPLEMENTATION METHOD

- ☐ SUBCONTRACT
- ☐ M&O LABOR (LOE)
- ☐ COMBINATION

ENGINEERING	DATE	DOE SSR	DATE
			☐ CONCUR ☐ NONCONCUR

STRATEGIC PETROLEUM RESERVE
ENGINEERING CHANGE PROPOSAL
CONFIGURATION CHANGE AFFECTED REPORT

TO BE COMPLETED BY TECHNICAL REVIEW PROCESS, ENGINEERING AND CONFIGURATION MANAGEMENT ORGANIZATION DEFINED PROCESS

ECP NO.	CONTRACTOR CHANGE NO.	REV.	CHANGE CLASSIFICATION	PAGE 2 OF ___
SJ-M/O-4626		**0**	☒ CLASS I ☐ CLASS II	

FUNCTIONS AFFECTED		DOCUMENTS AFFECTED	
YES/NO	**ITEM**	**YES/NO**	**ITEM**
NO	**LEVEL I ☐ LEVEL II ☐ LEVEL III CRITERIA**		**ELECTRICAL (cont'd)**
NO	PERFORMANCE CRITERIA	**NO**	308 - WIRING DIAGRAMS
NO	RAM	**NO**	310 - GROUNDING
NO	INTERFACE CHARACTERISTICS	**NO**	311 - CONDUIT & CABLE SCHEDULES (INCLUDING INST.)
NO	I/O POINTS	**NO**	313 - MCC/SWITCH GEAR ELEVATION & SCHEDULE
NO	DOE LEVEL I, II, III SCHEDULES	**NO**	315 - CATHODIC PROTECTION
NO	GUARANTEES/DELIVERABLES	**NO**	350 - STANDARDS
NO	SAFETY/ENV/FP (CIRCLE ONE)		**INSTRUMENTATION**
NO	SECURITY REQUIREMENTS	**NO**	401 - BLOCK DIAGRAM
NO	OPCS SOFTWARE	**NO**	402 - LOOP DIAGRAMS
NO	OPCS HARDWARE	**NO**	403 - INSTRUMENT PLANS AND DETAILS
NO	OPCS FIRMWARE	**NO**	404 - INSTRUMENT WIRING DIAGRAM
NO	SETPOINTS/RANGES	**NO**	409 - INSTRUMENT INDEX
NO	DIP SWITCH SETTINGS/JUMPERS	**NO**	450 - STANDARDS
NO	MASTER CI LIST		**MAPPING**
NO	WELLHEAD CONFIGURATION	**NO**	501 - ALIGNMENT SHEETS
NO	SPARES/PROVISIONING REQUIREMENTS	**NO**	509 - PIPELINE DRWGS (MAINLINE VALVES, DRIPS, SCRAPER, TRAPS, ETC.)
NO	GOVERNMENT FURNISHED EQUIPMENT	**NO**	550 - STANDARDS
NO	ENERGY USAGE		**ARCHITECTURAL**
NO	OPERATIONS MODELS	**NO**	720 - ELEVATIONS AND FLOOR PLANS
NO	OTHER	**NO**	750 - STANDARDS
	DOCUMENTS AFFECTED		**DOCUMENTATION**
	ITEMS	**NO**	900 - RESERVED
	PIPING	**NO**	901 - TECHNICAL/PERFORMANCE/DESIGN CRITERIA
NO	101 - PROCESS FLOW DIAGRAMS	**NO**	910 - DESIGN DESCRIPTION/BASIS
NO	102 - MECHANICAL FLOW DIAGRAMS	**NO**	911 - PROCESS SET POINT DOCUMENTS
NO	103 - PIPING AND INSTRUMENTATION DIAGRAMS (P&ID'S)	**NO**	912 - EQUIPMENT LIST
NO	104 - UTILITY FLOW DIAGRAMS	**NO**	913 - MOV LIST
NO	105 - GENERAL PIPING PLANS	**NO**	915 - ELECTRICAL SAFETY
NO	106 - AREA PLANS (MECHANICAL EQUIPMENT LOCATION)	**NO**	920 - I/O DOCUMENT
NO	122 - WELL HEAD DRAWINGS	**NO**	930 - OPERATIONS MANUALS
NO	123 – WELL COMPLETION CONFIGURATION DRWGS	**NO**	930 - MAINTENANCE MANUALS
NO	130 - VALVE LIST	**NO**	950 - STANDARD SPECIFICATIONS
NO	135 - LINE LIST	**NO**	970 - TASK SPECIFICATIONS
NO	140 - PSV LIST	**NO**	990 - CONFIGURATION MANAGEMENT REPORTS/I.B.O.M.
NO	150 - STANDARDS		
	CIVIL/STRUCTURAL		
NO	201 - PLOT PLANS		
NO	202 - SITE WORK: GRADING (ROUGH & FINISH) DRAIN FENCING		
NO	210 - FOUNDATIONS: LOCATION PLANS		
NO	216 - MINES (WEEKS ISLAND ONLY)		
NO	250 - STANDARDS		
	ELECTRICAL		
NO	301 - AREA CLASSIFICATION		
NO	302 - ONE LINE DIAGRAMS		
NO	303 - SCHEMATIC DIAGRAMS		
NO	304 - POWER PLANS AND DETAILS		
NO	305 - LIGHTING PLANS AND DETAILS		
NO	307 - SUBSTATION PLANS AND DETAILS		

COMMENTS:
(107) M-78

ENGINEERING	DATE	CONFIGURATION MANAGEMENT	DATE

STRATEGIC PETROLEUM RESERVE

ENGINEERING CHANGE PROPOSAL
SOFTWARE, HARDWARE, FIRMWARE CHANGE

CONTRACTOR CHANGE NUMBER	REVISION NUMBER	ECP NUMBER	Page 3 of 4

SOFTWARE CHANGE ANALYSIS	HARDWARE/SOFTWARE AFFECTED
	(NOTE: REDLINE CI BOM)

DISPOSITION OF PARTS

☐ REWORK SITE COMPONENTS ONLY ☐ REWORK ALL SITE COMPONENTS ☐ COMPONENTS NOT AFFECTED

☐ OTHER (DESCRIBE)_____

COMPONENT COMPATIBILITY (LIST COMPONENTS SEPARATELY IF COMPATIBILITIES ARE DIFFERENT)

☐ INTERCHANGABLE ☐ DRAWDOWN COMPATIBLE ☐ NONCOMPATIBLE

OPCS SUPPORT ENGINEER	DATE	FUNCTIONAL MANAGER	DATE

IMPLEMENTATION/TEST COMMENTS

WITNESSED BY			DATE

TEST APPROVED BY	DATE	CHANGE RELEASE AUTHORITY	DATE

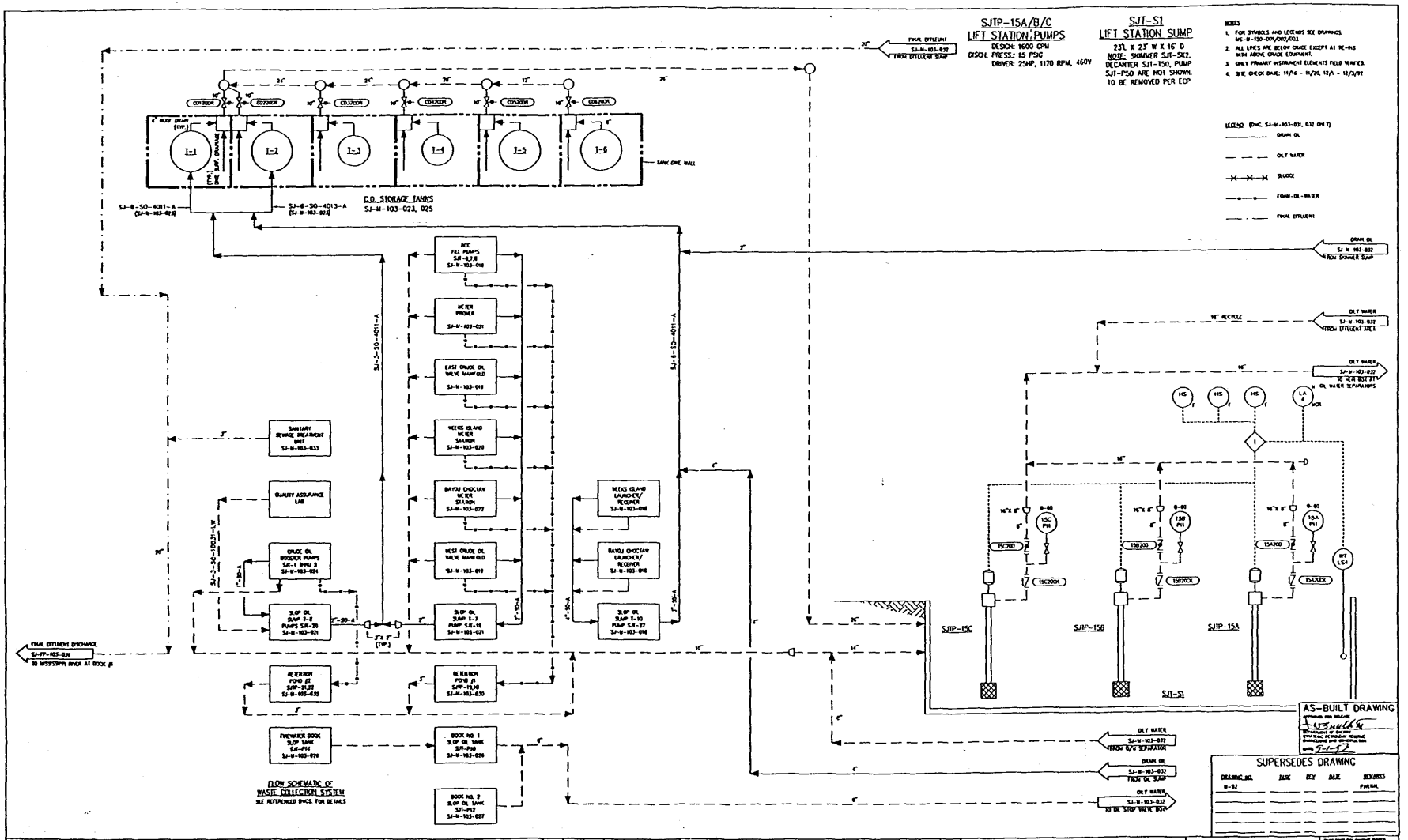
SJTP-15A/B/C
LIFT STATION PUMPS
DESIGN: 1600 GPM
DISCH. PRESS.: 15 PSIG
DRIVER: 25HP, 1170 RPM, 460V
SJT-S1
LIFT STATION SUMP
23'L X 23' W X 16' D
NOTE: SKIMMER SJT-SK2, DECANTER SJT-T50, PUMP SJT-P50 ARE NOT SHOWN. TO BE REMOVED PER ECP
NOTES
1. FOR SYMBOLS AND LEGENDS SEE DRAWINGS: MS-M-150-001/002/003
2. ALL LINES ARE BELOW GRADE EXCEPT AT RE-INS WITH ABOVE GRADE EQUIPMENT.
3. ONLY PRIMARY INSTRUMENT ELEMENTS FIELD VERIFIED.
4. SITE CHECK DATE: 11/14 - 11/20, 12/1 - 12/3/92
LEGEND (DWG. SJ-M-103-031, 032 ONLY)
DRAIN OIL
OILY WATER
SLUDGE
FOAM-OIL-WATER
FINAL EFFLUENT
C.O. STORAGE TANKS
SJ-M-103-023, 025
TANK DIKE WALL
SJ-8-SO-4011-A
SJ-8-SO-4013-A
SJ-3-SO-4011-A
SJ-6-SO-4011-A
SJ-3-SO-10031-LW
FINAL EFFLUENT DISCHARGE
SJ-FP-103-036
TO MISSISSIPPI RIVER AT DOCK #1
FLOW SCHEMATIC OF WASTE COLLECTION SYSTEM
SEE REFERENCED DWGS. FOR DETAILS
SJTP-15C
SJTP-15B
SJTP-15A
SJT-S1
AS-BUILT DRAWING
SUPERSEDES DRAWING
DRAWING NO.
TASK
REV
DATE
REMARKS
PARTIAL
PIPING & INSTRUMENT DIAGRAM
WASTE WATER COLLECTION
ST. JAMES TERMINAL
ST. JAMES PARISH, LOUISIANA
OFFICE OF ENGINEERING AND CONSTRUCTION
STRATEGIC PETROLEUM RESERVE
MECHANICAL
NONE
SJ-M-103-031
0
AS BUILT PER TASK MS-OM-032
06/17/1993 08

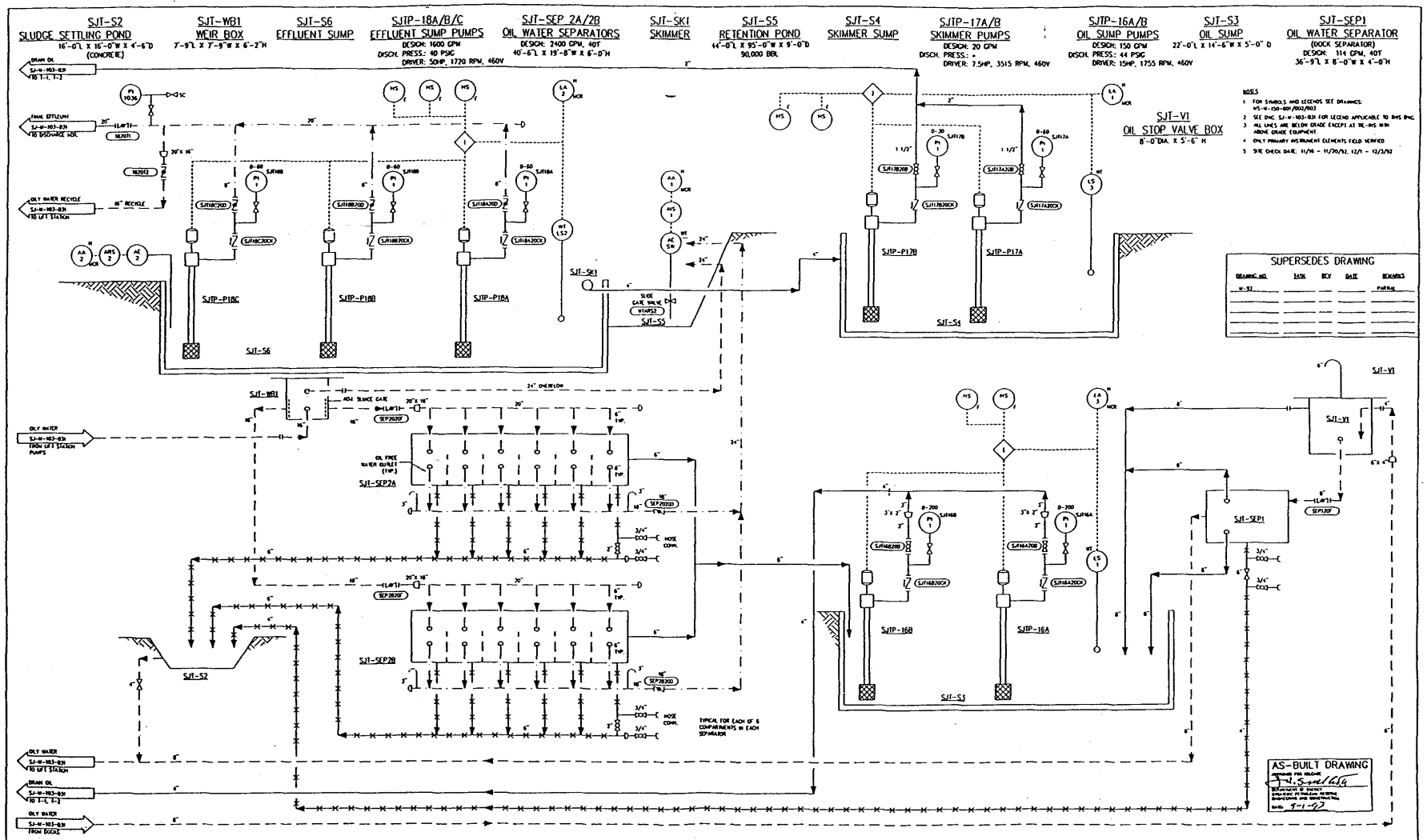

NO.	CHANGE DESCRIPTION	DRAWN BY	CHECKED BY	PROJECT R.E.	PROJECT MANAGER	O.E. APPROVAL	DATE
0	AS BUILT PER TASK MS-OM-032	SJET	DCT	EBR			

PIPING & INSTRUMENT DIAGRAM

WASTE WATER TREATMENT

ST. JAMES TERMINAL
ST. JAMES PARISH, LOUISIANA

OFFICE OF ENGINEERING AND CONSTRUCTION
STRATEGIC PETROLEUM RESERVE

DISCIPLINE: MECHANICAL
SCALE: NONE
DRAWING NUMBER: SJ-M-103-032
REV: 0

08/23/1993 08

LIFT STATION #3
4' DIA. X 10', 625 GAL. HOLDING CAPACITY
2 X 38 GPM @ 20 FT TDH SUBMERSIBLE PUMPS
MOTOR: 2 HP, 460 V

LIFT STATION #1
4'-10" DIA. X 13', 1000 GAL. HOLDING CAPACITY
2 X 36 GPM @ 25 FT TDH SUBMERSIBLE PUMPS
MOTOR: 2 HP, 460 V

SJWT-1 TREATMENT UNIT
RATED CAPACITY: 2500 GPD
AVERAGE/PEAK FLOW: 1.74/5.22 GPM
BOD LOADING: 4.18 LB/DAY
CLARIFIER CAPACITY: 1,275 GAL. TOTAL
AIR CAPACITY: 25 CFM, 3 PSIG, 1 HP MOTOR
CHLORINATOR: (VENDOR, TYPE, NOT KNOWN)

SJWT-2 TREATMENT UNIT
RATED CAPACITY: 1500 GPD
AVERAGE/PEAK FLOW: 1.04/3.12 GPM
BOD LOADING: 2.5 LB/DAY
CHLORINATOR: VENDOR "SANURE MINISAN MODEL 100"

LIFT STATION #2
4'-10" DIA. X 10', 1000 GAL. HOLDING CAPACITY
2 X 15 GPM @ 105 FT TDH (45 PSI) SUBMERSIBLE PUMPS
MOTOR: 2 HP, 460 V

NOTES:
1. FOR SYMBOLS AND LOCATIONS SEE DRAWINGS: MS-M-150-001/002/003.
2. ALL LINES ARE BELOW GRADE EXCEPT WHERE NOTED OTHERWISE.
3. ONLY PRIMARY INSTRUMENTS FIELD VERIFIED.
4. SITE DECOR BARS: 11/14 - 11/20/92, 12/1 - 12/3/92.

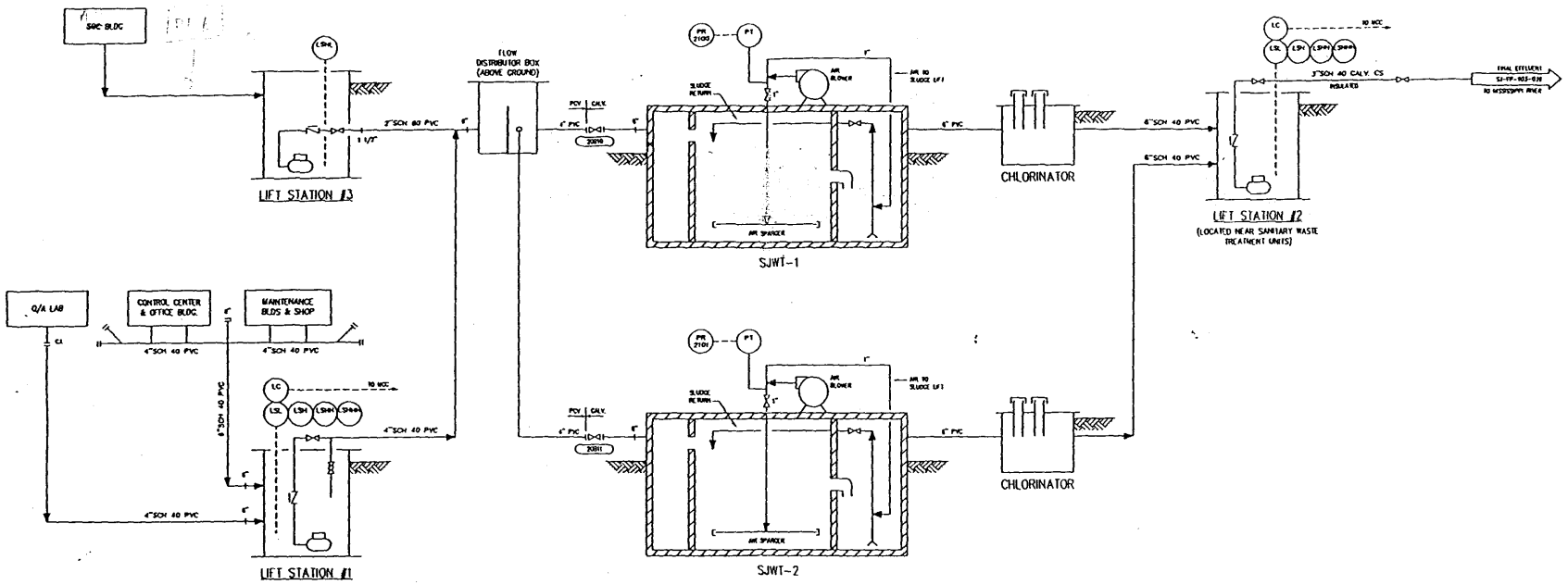

AS-BUILT DRAWING
SIGNATURE OF ENGINEER
STATE OF LOUISIANA
REGISTRATION NUMBER
DATE 7-1-93

SUPERSEDES DRAWING

DRAWING NO.	DATE	REV	DATE	REMARKS
P-103-012				

REV	DESCRIPTION	DRAWN BY	DESIGNED BY	PROJECT ENGR.	PROJECT MANAGER	DATE
0	AS BUILT PER TASK MS-OM-032	BET	RJR	EBH		7/1/93

PIPING & INSTRUMENT DIAGRAM
SANITARY WASTE TREATMENT SYSTEM
ST. JAMES TERMINAL
ST. JAMES PARISH, LOUISIANA

OFFICE OF ENGINEERING AND CONSTRUCTION
STRATEGIC PETROLEUM RESERVE
DEPARTMENT OF ENERGY
UNITED STATES OF AMERICA

DISCIPLINE: MECHANICAL
SCALE: NONE
DRAWING NUMBER: SJ-M-103-033
SHEET 1 OF 1
REV 0

08/17/1993 10

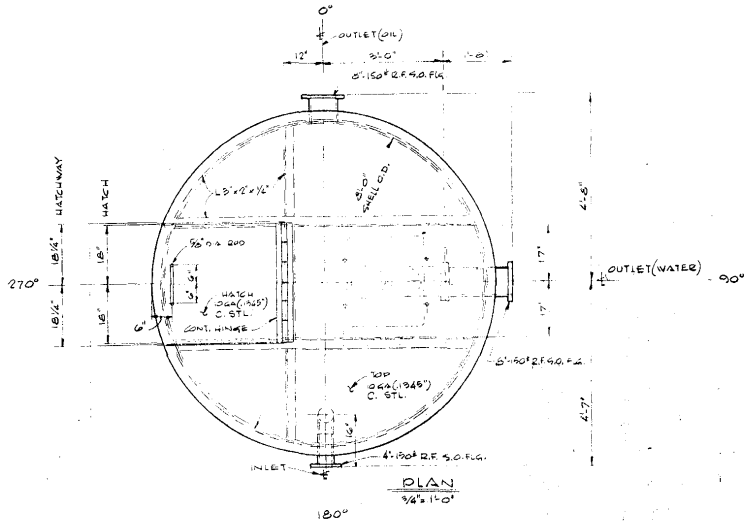

PLAN
3/4" = 1'-0"

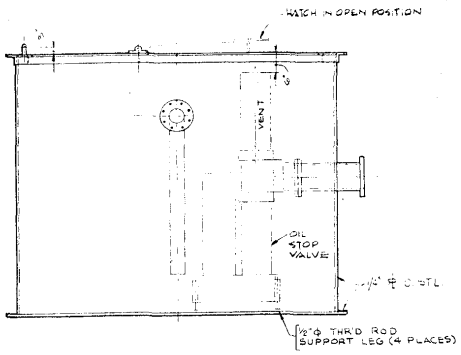

180° ELEVATION
3/4" = 1'-0"

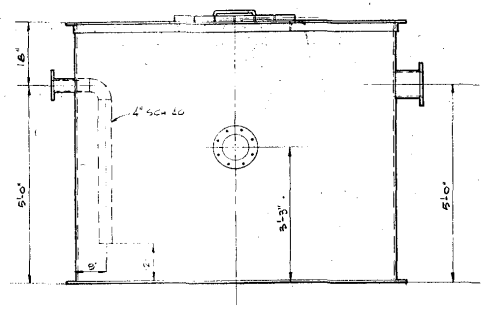

90° ELEVATION
3/4" = 1'-0"

COMPOSITE DRAWING
APPROVED FOR RELEASE PER REV. 1
ROBERT L. WELLER
ASSISTANT PROJECT MANAGER
ENGINEERING & CONSTRUCTION
DATE: 8/18/83

JDE IS RESPONSIBLE ONLY FOR REVISION AS NOTED ON THIS DRAWING. ALL OTHER DETAILS SHOWN ON THIS DRAWING ARE THE RESPONSIBILITY OF OTHERS.

JACOBS/D'APPOLONIA ENGINEERS
A JOINT VENTURE
COST ACCOUNT NUMBER 4559 - 08 - 280

SHEET ____ OF ____

REV. 1

RELEASED FOR CONSTRUCTION
REVISION NO. ____
WALK, HAYDEL & ASSOCIATES
BY [signature] DATE 11-1-78

NOTES
1. FOR GENERAL NOTES SEE DWG. # M-1.

REGISTRATION STAMP: STATE OF LOUISIANA — WALDEMAR D. STOPKEY — REG. No. 11637 — REGISTERED PROFESSIONAL ENGINEER IN CIVIL ENGINEERING — NUMBER 11637

DESIGNED BY: AP
DRAWN BY: 4/2
CHECKED BY: WM
PROJ. ENG.: WDS
SIGNATURE: [signature]
DATE: 5-23-78

WALK, HAYDEL & ASSOCIATES, INC.
ENGINEERS
NEW ORLEANS MOBILE BATON ROUGE
PROJECT NO. 77-2394 84-6

NO	CHANGE DESCRIPTION	DRWN BY	CHK'D BY	DATE
○	AS BUILT			
□	REVISION			
○	CHANGE ORDER			
△	ADDENDUM			

NO	CHANGE DESCRIPTION	DRWN BY	CHK'D BY	DATE
1	ISSUED FOR COMP RECORD SJ-JD-280	K.Z.	[initials]	8/10/83
–	AS-BUILT SJT-78	P.G.		4/16/80

OIL STOP VALVE
BOX SJT-V-1
MECHANICAL PACKAGE
ST. JAMES TERMINAL
ST. JAMES PARISH, LOUISIANA

FACILITY DEVELOPMENT AND CONSTRUCTION DIVISION
Strategic Petroleum Reserve

PROJECT NUMBER: SJ-JD-280
DISCIPLINE: MECHANICAL
DRAWING NUMBER: M-78
SHEET OF

30

Modifications to Oil Stop Valve

Problem / Existing Configuration

- The Oil Stop Valve has malfunctioned in the past causing the Oil Sump SJT-S3 to overflow.
- Fluid source is collected rainwater on Docks.
- Valve function was to prevent large amounts of oil from reaching the Dock Oil Water Separator by diverting it directly to the Oil Sump SJT-S3.

Proposed Solution / Enhancement

- The Oil Stop Valve was disabled by removing the float assembly.

Reason / Justification

- Prevent overflowing the Oil Sump SJT-S3 with rainwater from the docks.
- Prevent crude contamination with water.
- No additional risk created.