S ATEGIC PETROLEUM RESEF E

ENGINEERING CHANGE PROPOSAL

SUMMARY SHEET

CLASS I CHANGE

ECP NUMBER	TITLE
SJ-M/D-4645	Upgrade Hydraulic System At Sugarland

BUDGET SOURCE

- ☐ SPR BLI _____
- ☐ CONTRACTOR BASELINE
- ☐ AUD
- ☐ OTHER: Lease Contractor

AUTHORITY

☒ PCCB ☐ ECC

SCHEDULE

☐ YES
MILESTONE NUMBER _____
CMCR NUMBER

☒ NO

TOTAL ESTIMATED COST OF CHANGE

	FY 98
DESIGN	
CONSTRUCTION	
TOTAL	**$73,024**

PCCB/ECC SIGNATURES	DISPOSITION: CONCUR	DISPOSITION: NON CONCUR	DISPOSITION: DATE	COMMENTS CONDITIONS/LIMITATIONS
APM MGR ~~DOE SENIOR SITE OFFICIAL~~	✓		3/17/04	
APM TECHNICAL ASSURANCE	✓		3/16/04	
APM SYSTEMS AND PROJECTS	✓		16 MAR 2004	
APM MAINTENANCE AND OPERATIONS	✓		3/15/04	
DEPUTY PROJECT MANAGER				
DOE CMO				
PROJECT MANAGER				
DEPUTY ASSISTANT SECRETARY - SPR				

PCCB/ECC ACTION

☑ FULL APPROVAL ☐ CONDITIONAL/LIMITED APPROVAL ☐ DISAPPROVAL

ECPFM (4)

completed 1998

STRATEGIC PETROLEUM RESERVE

ENGINEERING CHANGE PROPOSAL

ECP NUMBER	ECP TITLE	PAGE 1 OF 4
SJ-M/O-4645	**Upgrade Hydraulic System At Sugarland**	

CONTRACTOR CHANGE NO. / REV.	INITIATED BY	DATE	SUBMITTED BY	DATE
	Richard Krebs	**1/22/03**	**Jill Derise**	**1/22/03**
PRIORITY	ORG / CONTRACTOR	PHONE NO.	ORG/CONTRACTOR	PHONE NO.
☐ EMERGENCY	**Shell Pipeline Company LP**	**(504) 728-3573**	**Shell Pipeline Company LP**	**(504) 728-7366**
☐ URGENT				
☒ ROUTINE				

VALUE ENGINEERING	DRAWDOWN CRITICAL	ROM ESTIMATE
☐ VEP (MANDATORY)	☐ YES	
☐ VECP (VOLUNTARY)	☒ NO	$ 73,024

DESCRIPTION:

PROBLEM / EXISTING CONFIGURATION

This ECP is being submitted as documentation for work that was done at Sugarland in 1998. There were reliability concerns with the existing hydraulic system:

1. **Separate units for each device (10) required hydraulics.**
2. **The existing units were not automated.**
3. **The existing units had frequent breakdowns due to their age, requiring excessive maintenance.**

PROPOSED SOLUTION / ENHANCEMENT

The 10 individual hydraulic units were replaced with a single automated unit for the terminal. See attached parts and installation information.

[Reference Shell AFE 149066]

REASON/JUSTIFICATION

Having a single unit for the terminal decreased the maintenance required for the hydraulic system and eliminated the need for the Operator to start and stop the units at the unit for each movement. Additionally, replacement parts for the new unit are readily available. The consolidated hydraulic unit was installed in 1998 at a capital cost of $73,024 and should be considered "unfunded liability" due to the permanent improvement to the facility.

CI'S AFFECTED

TECHNICAL ANALYSIS/RECOMMENDATION

IMPLEMENTATION METHOD
- ☐ SUBCONTRACT
- ☐ M&O LABOR (LOE)
- ☐ COMBINATION

ENGINEERING	DATE	DOE SSR	DATE
			☐ CONCUR ☐ NONCONCUR

STRATEGIC PETROLEUM RESERVE

ENGINEERING CHANGE PROPOSAL
SOFTWARE, HARDWARE, FIRMWARE CHANGE

CONTRACTOR CHANGE NUMBER	REVISION NUMBER	ECP NUMBER	
		SJ-M/0-4645	Page 3 of 4

SOFTWARE CHANGE ANALYSIS	HARDWARE/SOFTWARE AFFECTED
	(NOTE: REDLINE CI BOM)

DISPOSITION OF PARTS

☐ REWORK SITE COMPONENTS ONLY ☐ REWORK ALL SITE COMPONENTS ☐ COMPONENTS NOT AFFECTED

☐ OTHER (DESCRIBE)_____

COMPONENT COMPATIBILITY (LIST COMPONENTS SEPARATELY IF COMPATIBILITIES ARE DIFFERENT)

☐ INTERCHANGABLE ☐ DRAWDOWN COMPATIBLE ☐ NONCOMPATIBLE

OPCS SUPPORT ENGINEER	DATE	FUNCTIONAL MANAGER	DATE

IMPLEMENTATION/TEST COMMENTS

WITNESSED BY			DATE

TEST APPROVED BY	DATE	CHANGE RELEASE AUTHORITY	DATE

STRATEGIC PETROLEUM RESERVE
ENGINEERING CHANGE PROPOSAL
CONFIGURATION CHANGE AFFECTED REPORT

"TO BE COMPLETED BY TECHNICAL REVIEW PROCESS, ENGINEERING AND CONFIGURATION MANAGEMENT ORGANIZATION DEFINED PROCESS"

ECP NO.	CONTRACTOR CHANGE NO	REV.	CHANGE CLASSIFICATION ☐ CLASS I ☐ CLASS II PAGE 4 OF _4_____

FUNCTIONS AFFECTED			DOCUMENTS AFFECTED		
Y	N	ITEM	Y	N	ITEM
		LEVEL 1 ☐ II ☒ III ☐ CRITERIA			ELECTRICAL
		PERFORMANCE CRITERIA			315 - CATHODIC PROTECTION
		RAM			350 - STANDARDS
		INTERFACE CHARACTERISTICS			INSTRUMENTATION
		I/O POINTS			401 - BLOCK DIAGRAM
		DOE LEVEL I, II, III SCHEDULES			402 - LOOP DIAGRAMS
		GUARANTEES/DELIVERABLES			403 - INSTRUMENT PLANS AND DETAILS
		SAFETY/ENV/FP (CIRCLE ONE)			404 - INSTRUMENT WIRING DIAGRAM
		SECURITY REQUIREMENTS			409 - INSTRUMENT INDEX
		OPCS SOFTWARE			450 - STANDARDS
		OPCS HARDWARE			MAPPING
		OPCS FIRMWARE			501 - ALIGNMENT SHEETS
		RANGES/ I/O POINTS			509 - PIPELINE DWGS (MAINLINE VALVES, DRIPS, SCRAPER, TRAPS
		DIP SWITCH SETTINGS/JUMPERS			550 - STANDARDS
		MASTER CI LIST			ARCHITECTURAL
		WELLHEAD CONFIGURATION			720 - ELEVATIONS AND FLOOR PLANS
		SPARES/PROVISIONING REQUIREMENTS			750 - STANDARDS
		OPERATIONS MANUALS			DOCUMENTATION
		MAINTENANCE MANUALS			900 - RESERVED
		GOVERNMENT FURNISHED EQUIPMENT			901 - TECHNICAL/PERFORMANCE/DESIGN CRITERIA
		ENERGY USAGE			910 - DESIGN DESCRIPTION/BASIS
		VALUE ENG. (COST SAVINGS)			911 - PROCESS SET POINT DOCUMENTS
		OPERATIONS MODELS			912 - EQUIPMENT LIST
		OTHER			913 - MOV LIST
DOCUMENTS AFFECTED					915 - ELECTRICAL SAFETY
Y	N	ITEMS			920 - I/O DOCUMENT
		PIPING			930 - OPERATION AND MAINTENANCE MANUALS
		101 - PROCESS FLOW DIAGRAMS			950 - STANDARD SPECIFICATIONS
		102 - MECHANICAL FLOW DIAGRAMS			970 - TASK SPECIFICATIONS
		103 - PIPING AND INSTRUMENTATION DIAGRAMS (P&ID'S)			990 - CONFIGURATION MANAGEMENT REPORTS 1.B.0.M
		104 - UTILITY FLOW DIAGRAMS			999 - RESERVED
		105 - GENERAL PIPING PLANS	COMMENTS:xn		
		106 - AREA PLANS (MECHANICAL EQUIPMENT LOCATION)			
		122 - WELLLHEAD DRAWINGS			
		130 - VALVE LIST			
		135 - LINE LIST			
		140 - PSV LIST			
		150 – STANDARDS			
		CIVIL/STRUCTURAL			
		201 - PLOT PLANS			
		202 - SITE WORK, GRADING (ROUGH & FINISH DRAINAGE FENCING			
		210 - FOUNDATIONS: LOCATION PLANS			
		216 - MINES (WEEKS ISLAND ONLY)			
		250 – STANDARDS			
		ELECTRICAL			
		301 - AREA CLASSIFICATION			
		302 - ONE LINE DIAGRAMS			
		303 - SCHEMATIC DIAGRAMS			
		304 - POWER PLANS AND DETAILS			
		305 - LIGHTING PLANS AND DETAILS			
		307 - SUBSTATION PLANS AND DETAILS			
		308 - WIRING DIAGRAMS			
		310 – GROUNDING			
		311 - CONDUIT & CABLE SCHEDULES (INCLUDING INSTRUMENTS)			
		313 - MCC/SWITCH GEAR EVALUATION & SCHEDULE			

Engineering	DATE	CONFIGURATION MANAGEMENT	DATE

ENGINEERING CHANGE PROPOSAL
LIFE CYCLE COST FORM

ECP NUMBER:	ECP TITLE: Upgrade Hydraulic System At Sugarland

EXECUTIVE SUMMARY:
This ECP is being submitted as documentation for work that was done at Sugarland in 1998. There were reliability concerns with the existing hydraulic system:

4. Separate units for each device (10) required hydraulics.
5. The existing units were not automated.
6. The existing units had frequent breakdowns due to their age, requiring excessive maintenance.

IMPLEMENTATION PLAN:
The 10 individual hydraulic units were replaced with a single automated unit for the terminal. See attached parts and installation information. Having a single unit for the terminal decreased the maintenance required for the hydraulic system and eliminated the need for the Operator to start and stop the units at the unit for each movement. Additionally, replacement parts for the new unit are readily available. The consolidated hydraulic unit was installed in 1998 at a capital cost of $73,024 and should be considered "unfunded liability" due to the permanent improvement to the facility.

IMPLEMENTATION COST:

DESIGN:	
CONSTRUCTION:	$73,024
TOTAL:	$73,024

LIFE CYCLE COST:
Not applicable. No foreseeable upgrades or maintenance on the hydraulic unit.

IMPACT SUMMARY:

LEVEL I, II, and III CRITERIA:	CONTRACT COMPLETION DATES:
CODES, REGULATIONS, PERMITS, ETC.:	GOVERNMENT-FURNISHED EQUIPMENT:
SAFETY, ENVIRONMENTAL, FIRE PROTECTION SYSTEMS, SECURITY:	SCHEDULE: Installed in 1998

HYDRAULIC POWER UNIT

ITEM	QTY.	DESCRIPTION	PART NUMBER
A	1	HYDRO-CRAFT	WC-120
B	1	SKID BASE AND RIZER FOR HYDRAULIC RESERVOIR	HOE
C	2	US ELECTRICAL 20 HP 286TC FRAME TEFC 1200 RPM	
D	2	VESCOR PUMP / MOTOR ADAPTER	1980
E	2	LOVEJOY COUPLINGS	L150
F	2	NACHI PRESSURE COMPENSATED PUMP	PVS-2B-35N3-E12
G	2	UCI 1 1/2" BALL VALVE	
H	2	SNAP-TITE CHECK VALVE	CPIFF-8P-65
I	1	MP PRODUCTS FLOAT SWITCH	RLGIT3SI
J	1	MP PRODUCTS RETURN LINE FILTER	MPF-180AG4A10HBVR
	1	MP PRODUCTS FILTER ELEMENT	MF1801A10HB
K	1	NACHI RELIEF VALVE	R-T06-3-E20
L	1	PARKER NEEDLE VALVE	N400S
L1	1	MP PRODUCTS PRESSURE GAUGE	MPG 0 -2000 PSI

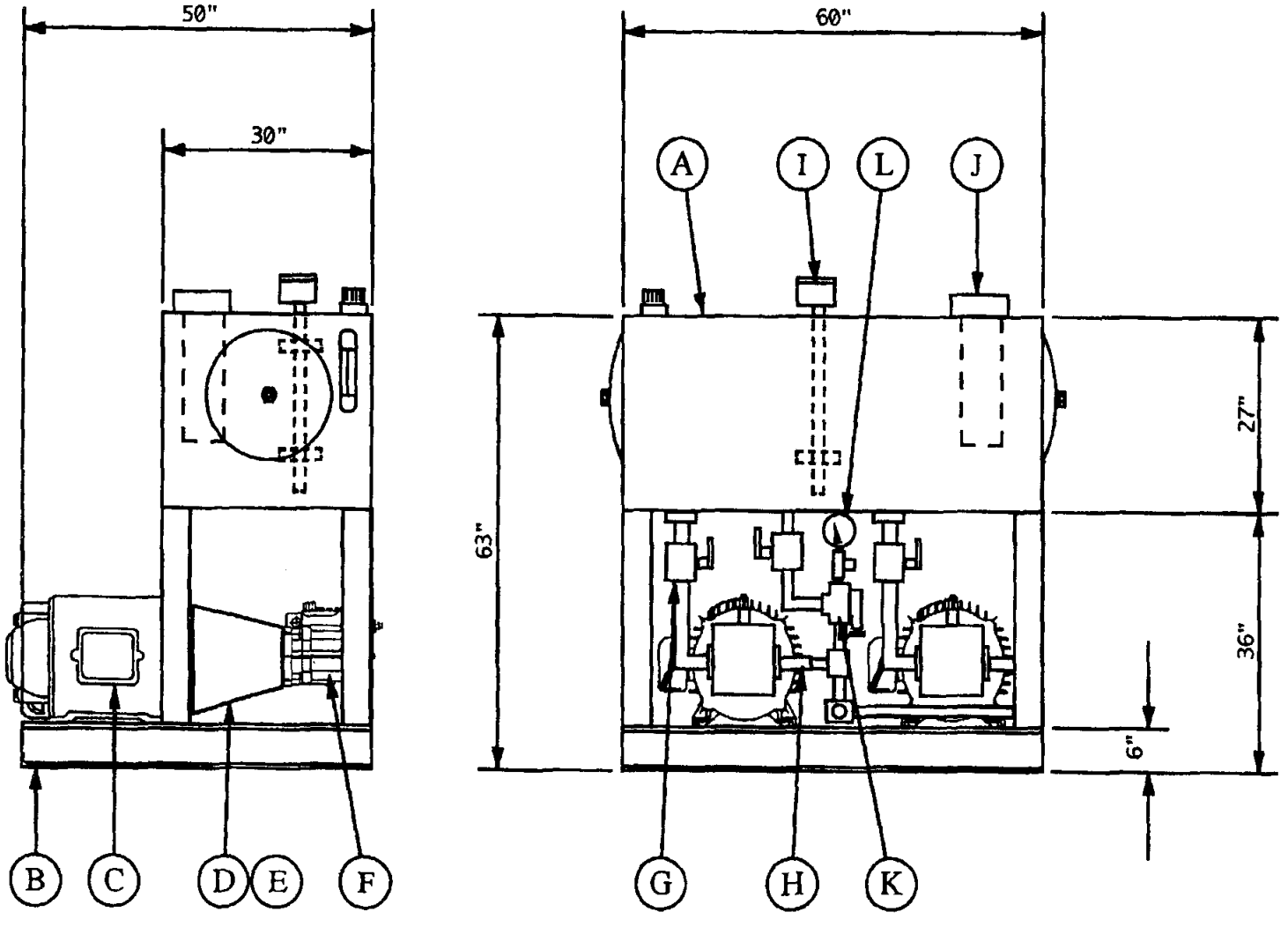

AUTOMATION ENGINEERING COMPANY
9941 MAMMOTH AVE.
BATON ROUGE, LA 70814

TEL: 504-927-4972

CENTRAL HYDRAULIC POWER UNIT

DR. BY	TMS	EQUILON PIPE LINE
CH. BY		
DATE	8-10-98	DRAWING NUMBER: EP81098
SCALE		REV.1

2252654288 P.1

J.I.C. Reservoir Dimensional Data

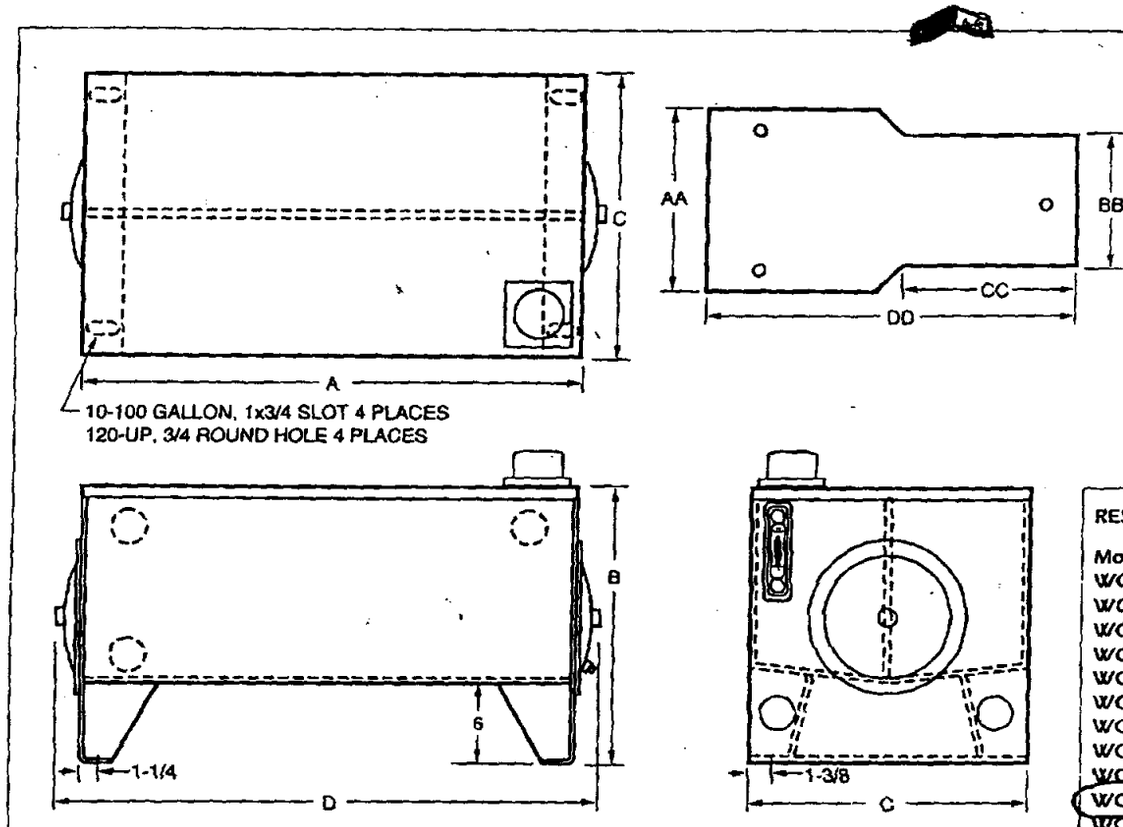

RESERVOIR WEIGHTS

Model	lbs
WC-10-10	100
WC-15-15	125
WC-20-20	130
WC-30-30	175
WC-40-40	190
WC-50-50	195
WC-60-60	235
WC-80-80	400
WC-100	425
WC-120	540
WC-150	595
WC-200	940
WC-250	1000
WC-300	1075
MP-1	50
MP-2	100
MP-3	185

COUPLING GUARD

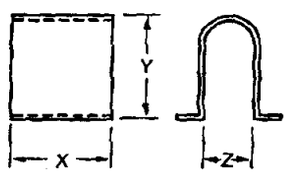

X, Y and Z dimensions to be supplied by customer

MOUNTING PLATES

MODEL NO.	AA	BB	CC	DD	THICKNESS	MAX FR.	HOLES
MP-1	12.0	7.0	9.50	24.0	3/4	254	3
MP-2	13.0	9.0	11.50	30.0	1	286	3
MP-3	16.0	11.0	15.0	36.0	1-1/4	365	5

J.I.C. RESERVOIR SPECIFICATIONS

MODEL NO.	WC-10-10	WC-15-15	WC-20-20	WC-30-30	WC-40-40	WC-50-50	WC-60-60	WC-80-80	WC-100	WC-120	WC-150	WC-200	WC-250	WC-300
GALLON	10	15	20	30	40	50	60	80	100	120	150	200	250	300
A (L)	22	26	30	36	36	36	48	60	60	60	60	72	72	72
B (H)	20	20	20	20	22	23	21	21-1/4	24-1/4	25-5/8	30-5/8	29-3/8	32-3/8	36-5/8
C (W)	18	18	18	24	24	24	27	27	27	30	30	36	36	36
D	26	30	34	40-3/4	40-3/4	40-3/4	52-3/4	64-3/4	64-3/4	66	66	78	78	78
END COVER	12	12	12	14	14	14	14	14	14	18	18	18	18	18
ENDS	7 ga.	7 ga.	7 ga.	7 ga.	7 ga.	7 ga.	7 ga.	7 ga.	7 ga.	3/8	3/8	3/8	3/8	3/8
top	7 ga.	7 ga.	7 ga.	7 ga.	7 ga.	7 ga.	7 ga.	3/8	3/8	3/8	3/8	3/8	3/8	3/8

All dimensions are approximate in inches

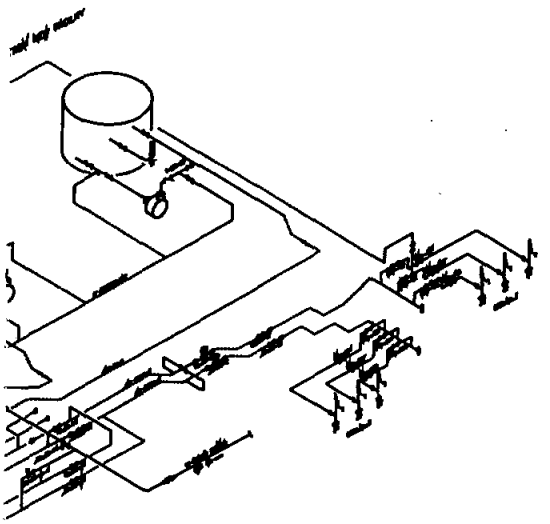

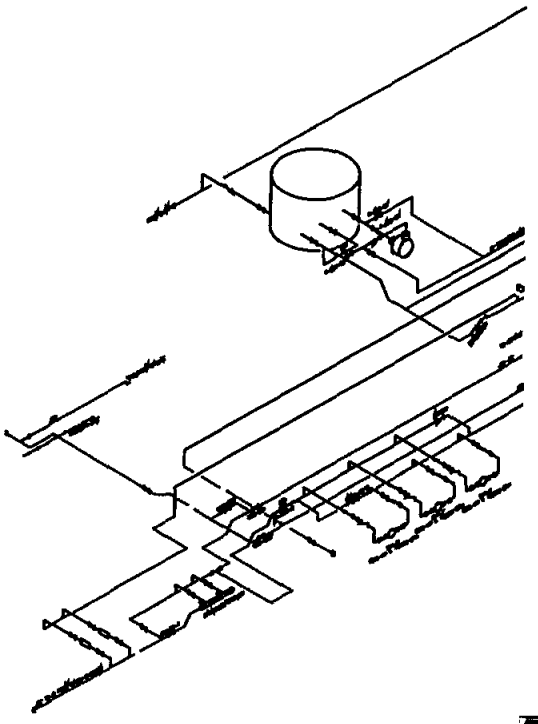

PLEASE NOTIFY
NEW ORLEANS DRAFTING
BEFORE ANY REVISIONS

Shell Pipeline Company LP
P.O. Box 52163
New Orleans, LA 70152

March 10, 2004

Mr. Michael Curole
Engineer
Drawdown Readiness and Energy Management
U.S. Department of Energy
Strategic Petroleum Reserve
900 Commerce Road East
New Orleans, LA 70123

Re: ECP Drawing for Location of Hydraulic Valves

Dear Mr. Curole,

Enclosed please find a Hardcopy drawing #S-32841-06 which highlights the location of the Hydraulic Valve Actuators associated with the ECP for "Upgrade Hydraulic System at Sugarland" The information was requested from Mr. Richard Krebs of Shell Pipeline Company LP on March 8, 2004.

The valves involved in the project include:

BCM 120-C
BCM 220-C
BCM 320-C

WIM 120-C
WIM 220-C
WIM 320-C

WI 120-C

The valve locations are located in the ballooned areas of the drawing.

If you have any questions, please contact me at 504 728 7366

Sincerely

T.R. Coleman PE
Technical Supervisor

cc: J. Hayward
J. Barab

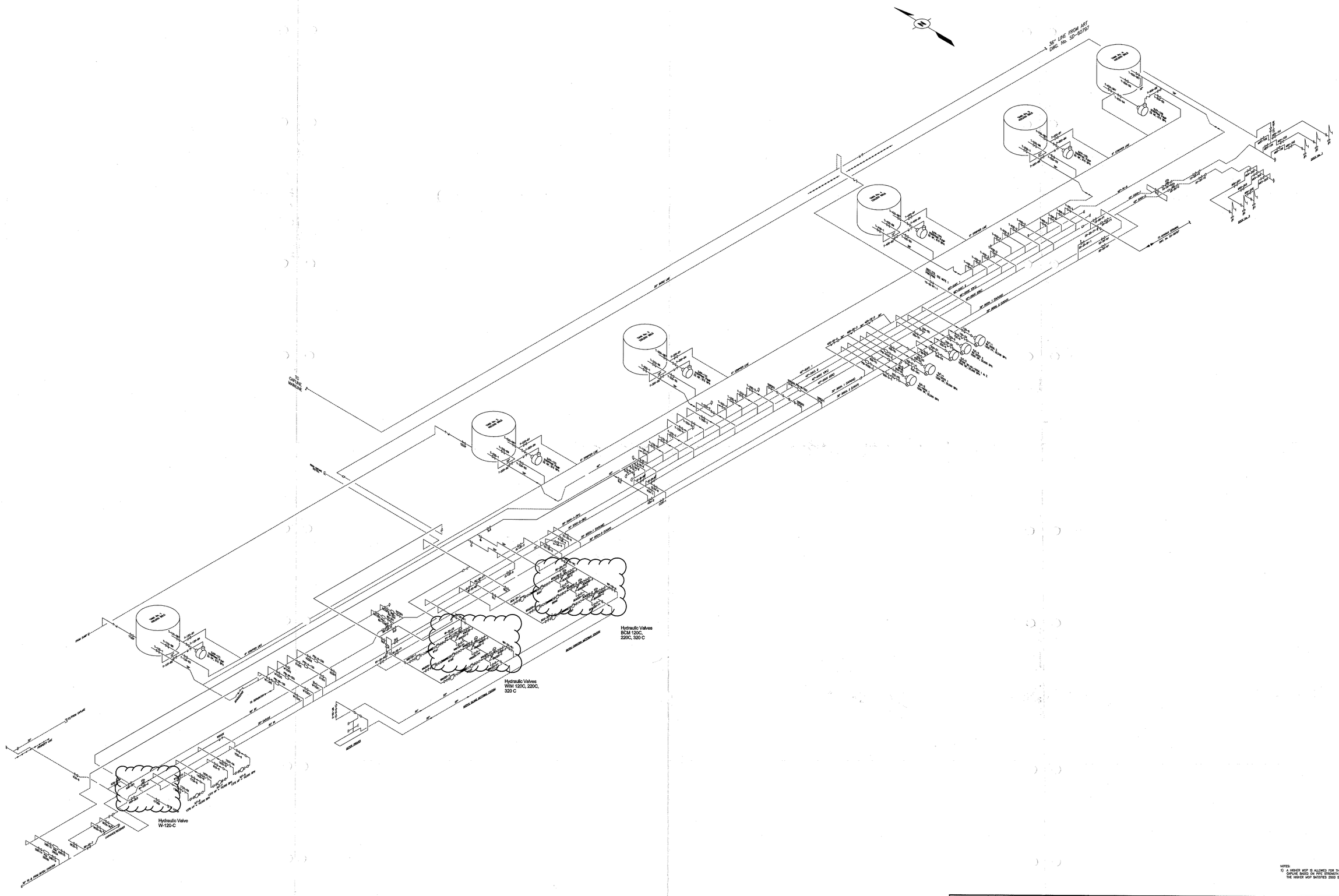

NOTES:

1) A HIGHER MOP IS ALLOWED FOR THE CONNECTING PIPE TO CAPLINE BASED ON PIPE STRENGTH AND HYDROTEST (2002). THE HIGHER MOP SATISFIES 2003 SURGE STUDY.

*CAD DRAWING	06	09/03	ADD NOTE 1		SDE	REX		REX	REX		
DO NOT REVISE	05	01/03	GENERAL REVISION		WTL	REX		REX	REX		
MANUALLY*	04	11/00	ADDED VALVE SLB AND ASSOCIATED PIPING		WTL	RWR		RWR			
	03	02/99	DEBOTTLENECK REVISION		WTL	KJF		WLT	KJF		
	REV NO.	DATE	DESCRIPTION OF REVISION	ES NO.	BY	CHK	DSN	ACCT	APP	APP	APP

SUGARLAND TERMINAL

THIS DOCUMENT IS CONFIDENTIAL AND IT SHALL NOT BE REPRODUCED OR REGISTERED WITHOUT PRIOR PERMISSION, WITHOUT THE OPERATION AND THE OWNER, WHO ARE INDEMNIFY AS TO THE CORRECTNESS OR COMPLETENESS OF THE INFORMATION CONTAINED ON THIS DRAWING, AND THE USER ASSUMES ALL RISK OF USE TO PERSONS AND PROPERTY AS A RESULT OF RELIANCE THEREIN.

VALVE CHART
DOE – SUGARLAND TERMINAL

SCALE	NOT TO SCALE	DATE	
DRAWN	RDEZELL	12/11/99	S – 32841

REV. 06

PLOT AT 48" SCALE

TO VIEW LINE FILL INFORMATION, TURN OFF LAYERS "PIPE1", "PIPE2", "TEXT", AND "TXT". TURN ON LAYERS BEGINNING WITH "LF".