STRATEGIC PETROLEUM RESERVE

ENGINEERING CHANGE PROPOSAL

SUMMARY SHEET

CLASS I CHANGE

ECP NUMBER	TITLE
SJ-M/O-4635	**Install 20" Static Mixer at Sugarland**

BUDGET SOURCE

- ☐ SPR BLI _____
- ☐ CONTRACTOR BASELINE
- ☐ AUD
- ☐ OTHER: Lease Contractor

AUTHORITY

- ☒ PCCB
- ☐ ECC

SCHEDULE

- ☐ YES
  MILESTONE NUMBER _____
  CMCR NUMBER
- ☒ NO

TOTAL ESTIMATED COST OF CHANGE

	FY 98
DESIGN	
CONSTRUCTION	
TOTAL	**$143,286**

PCCB/ECC SIGNATURES	DISPOSITION: CONCUR	DISPOSITION: NON CONCUR	DISPOSITION: DATE	COMMENTS CONDITIONS/LIMITATIONS
~~APM MANAGEMENT AND ADMIN DOE SENIOR SITE OFFICIAL~~				
APM TECHNICAL ASSURANCE	✓		3/16/04	Need Baseline Dwg ECN to Put vendor Data into Centra
APM SYSTEMS AND PROJECTS	✓		16 MAR 2004	
APM MAINTENANCE AND OPERATIONS	✓		3/15/04	
~~DEPUTY PROJECT MANAGER~~ APM MHA	✓		3/17/04	
DOE CMO				
PROJECT MANAGER				
DEPUTY ASSISTANT SECRETARY - SPR				

PCCB/ECC ACTION

- ☑ FULL APPROVAL
- ☐ CONDITIONAL/LIMITED APPROVAL
- ☐ DISAPPROVAL

ECPFM (4)

completed 1998

STRATEGIC PETROLEUM RESERVE

ENGINEERING CHANGE PROPOSAL

ECP NUMBER	ECP TITLE	PAGE 1 OF 4
SJ-M/O-4635	**Install 20" Static Mixer at Sugarland**	

CONTRACTOR CHANGE NO. / REV.	INITIATED BY	DATE	SUBMITTED BY	DATE
	Richard Krebs	**01/22/2003**	**Jill Derise**	**01/22/2003**
PRIORITY	ORG / CONTRACTOR	PHONE NO.	ORG/CONTRACTOR	PHONE NO.
☐ EMERGENCY	**Shell Pipeline Company LP**	(504) 728-3573	**Shell Pipeline Company LP**	(504) 728-7366
☐ URGENT				
☒ ROUTINE				

VALUE ENGINEERING	DRAWDOWN CRITICAL	ROM ESTIMATE
☐ VEP (MANDATORY)	☐ YES	
☐ VECP (VOLUNTARY)	☒ NO	$ **143,286.**

DESCRIPTION:

PROBLEM / EXISTING CONFIGURATION

This ECP is being submitted as documentation of work that was done at Sugarland in 1998. Installed equipment did not allow for custody transfer quality samples to be taken when metering the incoming crude from Houma or Ship Shoal.

PROPOSED SOLUTION / ENHANCEMENT

A Komax Static mixer was purchased and installed upstream of the sampling point to ensure adequate mixing. The sampler model number is CT200-2-150W. The Komax, Inc. job number is 17846-98.

[Reference Shell AFE 162669]

REASON/JUSTIFICATION

The mixer ensures that a representative sample of the crude is being taken for custody transfer measurement. The static mixer should be considered "unfunded liability" due to the permanent improvement to the facility.

CI'S AFFECTED

TECHNICAL ANALYSIS/RECOMMENDATION	IMPLEMENTATION METHOD
	☐ SUBCONTRACT
	☐ M&O LABOR (LOE)
	☐ COMBINATION

ENGINEERING	DATE	DOE SSR	DATE
			☐ CONCUR
			☐ NONCONCUR

STRATEGIC PETROLEUM RESERVE

ENGINEERING CHANGE PROPOSAL
SOFTWARE, HARDWARE, FIRMWARE CHANGE

CONTRACTOR CHANGE NUMBER	REVISION NUMBER	ECP NUMBER	
		SJ-M/O-4635	Page 3 of 4

SOFTWARE CHANGE ANALYSIS	HARDWARE/SOFTWARE AFFECTED
	(NOTE: REDLINE CI BOM)

DISPOSITION OF PARTS

☐ REWORK SITE COMPONENTS ONLY ☐ REWORK ALL SITE COMPONENTS ☐ COMPONENTS NOT AFFECTED

☐ OTHER (DESCRIBE)_____

COMPONENT COMPATIBILITY (LIST COMPONENTS SEPARATELY IF COMPATIBILITIES ARE DIFFERENT)

☐ INTERCHANGABLE ☐ DRAWDOWN COMPATIBLE ☐ NONCOMPATIBLE

OPCS SUPPORT ENGINEER	DATE	FUNCTIONAL MANAGER	DATE

IMPLEMENTATION/TEST COMMENTS

WITNESSED BY			DATE
TEST APPROVED BY	DATE	CHANGE RELEASE AUTHORITY	DATE

STRATEGIC PETROLEUM RESERVE
ENGINEERING CHANGE PROPOSAL
CONFIGURATION CHANGE AFFECTED REPORT

"TO BE COMPLETED BY TECHNICAL REVIEW PROCESS, ENGINEERING AND CONFIGURATION MANAGEMENT ORGANIZATION DEFINED PROCESS"

ECP NO.	CONTRACTOR CHANGE NO	REV.	CHANGE CLASSIFICATION
SJ-M/O-4635			☑ CLASS I ☐ CLASS II PAGE 4 OF 4

FUNCTIONS AFFECTED			DOCUMENTS AFFECTED		
Y	N	ITEM	Y	N	ITEM
		LEVEL 1 ☐ II ☒ III ☐ CRITERIA			ELECTRICAL
		PERFORMANCE CRITERIA			315 - CATHODIC PROTECTION
		RAM			350 - STANDARDS
		INTERFACE CHARACTERISTICS			INSTRUMENTATION
		I/O POINTS			401 - BLOCK DIAGRAM
		DOE LEVEL I, II, III SCHEDULES			402 - LOOP DIAGRAMS
		GUARANTEES/DELIVERABLES			403 - INSTRUMENT PLANS AND DETAILS
		SAFETY/ENV/FP (CIRCLE ONE)			404 - INSTRUMENT WIRING DIAGRAM
		SECURITY REQUIREMENTS			409 - INSTRUMENT INDEX
		OPCS SOFTWARE			450 - STANDARDS
		OPCS HARDWARE			MAPPING
		OPCS FIRMWARE			501 - ALIGNMENT SHEETS
		RANGES/ I/O POINTS			509 - PIPELINE DWGS (MAINLINE VALVES, DRIPS, SCRAPER, TRAPS
		DIP SWITCH SETTINGS/JUMPERS			550 - STANDARDS
		MASTER CI LIST			ARCHITECTURAL
		WELLHEAD CONFIGURATION			720 - ELEVATIONS AND FLOOR PLANS
		SPARES/PROVISIONING REQUIREMENTS			750 - STANDARDS
		OPERATIONS MANUALS			DOCUMENTATION
		MAINTENANCE MANUALS			900 - RESERVED
		GOVERNMENT FURNISHED EQUIPMENT			901 - TECHNICAL/PERFORMANCE/DESIGN CRITERIA
		ENERGY USAGE			910 - DESIGN DESCRIPTION/BASIS
		VALUE ENG. (COST SAVINGS)			911 - PROCESS SET POINT DOCUMENTS
		OPERATIONS MODELS			912 - EQUIPMENT LIST
		OTHER			913 - MOV LIST
		DOCUMENTS AFFECTED			915 - ELECTRICAL SAFETY
Y	N	ITEMS			920 - I/O DOCUMENT
		PIPING			930 - OPERATION AND MAINTENANCE MANUALS
		101 - PROCESS FLOW DIAGRAMS			950 - STANDARD SPECIFICATIONS
		102 - MECHANICAL FLOW DIAGRAMS			970 - TASK SPECIFICATIONS
		103 - PIPING AND INSTRUMENTATION DIAGRAMS (P&ID'S)			990 - CONFIGURATION MANAGEMENT REPORTS 1.B.0.M
		104 - UTILITY FLOW DIAGRAMS			999 - RESERVED
Y		105 - GENERAL PIPING PLANS	COMMENTS:xn		
		106 - AREA PLANS (MECHANICAL EQUIPMENT LOCATION)			
		122 - WELLLHEAD DRAWINGS			
		130 - VALVE LIST			
		135 - LINE LIST			
		140 - PSV LIST			
		150 - STANDARDS			
		CIVIL/STRUCTURAL			
		201 - PLOT PLANS			
		202 - SITE WORK, GRADING (ROUGH & FINISH DRAINAGE FENCING			
		210 - FOUNDATIONS: LOCATION PLANS			
		216 - MINES (WEEKS ISLAND ONLY)			
		250 - STANDARDS			
		ELECTRICAL			
		301 - AREA CLASSIFICATION			
		302 - ONE LINE DIAGRAMS			
		303 - SCHEMATIC DIAGRAMS			
		304 - POWER PLANS AND DETAILS			
		305 - LIGHTING PLANS AND DETAILS			
		307 - SUBSTATION PLANS AND DETAILS			
		308 - WIRING DIAGRAMS			
		310 - GROUNDING			
		311 - CONDUIT & CABLE SCHEDULES (INCLUDING INSTRUMENTS)			
		313 - MCC/SWITCH GEAR EVALUATION & SCHEDULE			

Engineering	DATE	CONFIGURATION MANAGEMENT	DATE

ENGINEERING CHANGE PROPOSAL
LIFE CYCLE COST FORM

ECP NUMBER: SJ-M/O-4635	ECP TITLE: Install 20" Static Mixer at Sugarland

EXECUTIVE SUMMARY:
This ECP is being submitted as documentation of work that was done at Sugarland in 1998. Installed equipment did not allow for custody transfer quality samples to be taken when metering the incoming crude from Houma or Ship Shoal.

IMPLEMENTATION PLAN:
A Komax Static mixer was purchased and installed upstream of the sampling point to ensure adequate mixing. The sampler model number is CT200-2-150W. The Komax, Inc. job number is 17846-98.

IMPLEMENTATION COST:

DESIGN:

CONSTRUCTION:

TOTAL: $143,286

LIFE CYCLE COST:
Not applicable. No foreseeable maintenance or upgrade to equipment, although the static mixer should be considered "unfunded liability" due to the permanent improvement to the facility.

IMPACT SUMMARY:

LEVEL I, II, and III CRITERIA:	CONTRACT COMPLETION DATES:
CODES, REGULATIONS, PERMITS, ETC.:	GOVERNMENT-FURNISHED EQUIPMENT:
SAFETY, ENVIRONMENTAL, FIRE PROTECTION SYSTEMS, SECURITY:	SCHEDULE:

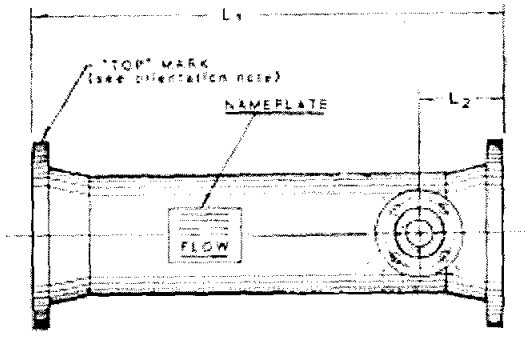

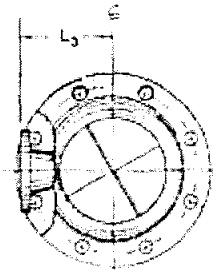

HOUSING
CARBON STEEL - A106 Grade B or equal
Schedule 40 for units up to 10" size
Standard Wall (3/8") for 12" size & larger

FLANGES
CARBON STEEL - A105 ANSI B 16.5
Raised Face Weld Neck 150 lb. and 300 lb.

ELEMENTS
CARBON STEEL - A36 or equal

- L_1 DIMENSION IS IDENTICAL FOR ALL END CONFIGURATIONS. L_2 AND L_3 ARE BASED ON 300 LB. FLANGES
- SIDE PORT IS TWO INCH RFWN FLANGE ON ALL SIZES
- ALL DIMENSIONS ± 1/8"

ORIENTATION NOTE

WHEN CT MIXERS ARE MOUNTED HORIZONTALLY, THE "TOP" MARK MUST BE UPPERMOST TO ENSURE THAT THE B,S & W IS LIFTED FROM THE BOTTOM OF THE PIPELINE AND PROPERLY DISPERSED BY THE SPECIAL FIRST MIXING ELEMENT. SEE BULLETIN 104

LINE SIZE NPS	L_1 in.	L_2 in.	L_3 in.	SHIPPING WEIGHT lb. Weld Prep	150 lb.	300 lb.
3	25	5 1/2	4 5/16	36	56	72
4	28	5 1/2	4 7/8	50	80	106
6	39	6	6	98	146	188
8	48	6 1/2	7 1/8	168	246	308
10	57	7	8 1/8	328	432	516
12	67	8	9 1/8	384	544	670
14	73	8 1/2	9 3/4	461	681	827
16	82	9	10 3/4	588	868	1094
18	92	9 1/2	11 3/4	738	1038	1384
20	101	10	12 3/4	896	1256	1702
24	119	10	14 3/4	1361	1781	2427

"CT" SERIES MODEL NUMBERS

CT 080 2 - S 150W

- 150W — End Configuration 150 lb. RFWN in example
- S — Side ports for sampler probe.
- 2 — Number of mixing elements, two in example
- 080 — Line size, 8" in example
- CT — Series identifier

END CONFIGURATIONS

150W - 150 lb. raised face weld neck flanges

300W - 300 lb. raised face weld neck flanges

KOMAX SYSTEMS, INC.

LINE SIZE	LENGTH	SHIPPING WEIGHT IN lb.		
NPS	INCHES	Weld Prep.	150 lb.	300 lb.
3	9	10	30	40
4	12	18	48	68
6	18	43	91	127
8	24	82	158	216
10	30	142	246	324
12	36	205	365	485
14	39	246	466	606
16	45	323	603	823
18	51	410	710	1050
20	57	508	868	1308
24	69	734	1254	1894

WHEN SIDE PORTS ARE NOT REQUIRED
USE THE FOLLOWING MODEL NUMBERS

CT 080 2-150W — End Configuration 150 lb. RFWN in example.
- 2 — Number of mixing elements, two in example
- 080 — Line size, 8" in example
- CT — Series identifier

END CONFIGURATIONS

150W - 150 lb. raised face weld neck flanges
300W - 300 lb. raised face weld neck flanges
11 - Ends prepared for welding

NOTE: Small units 3/4 inch NPS through two inch NPS are available with threaded ends.

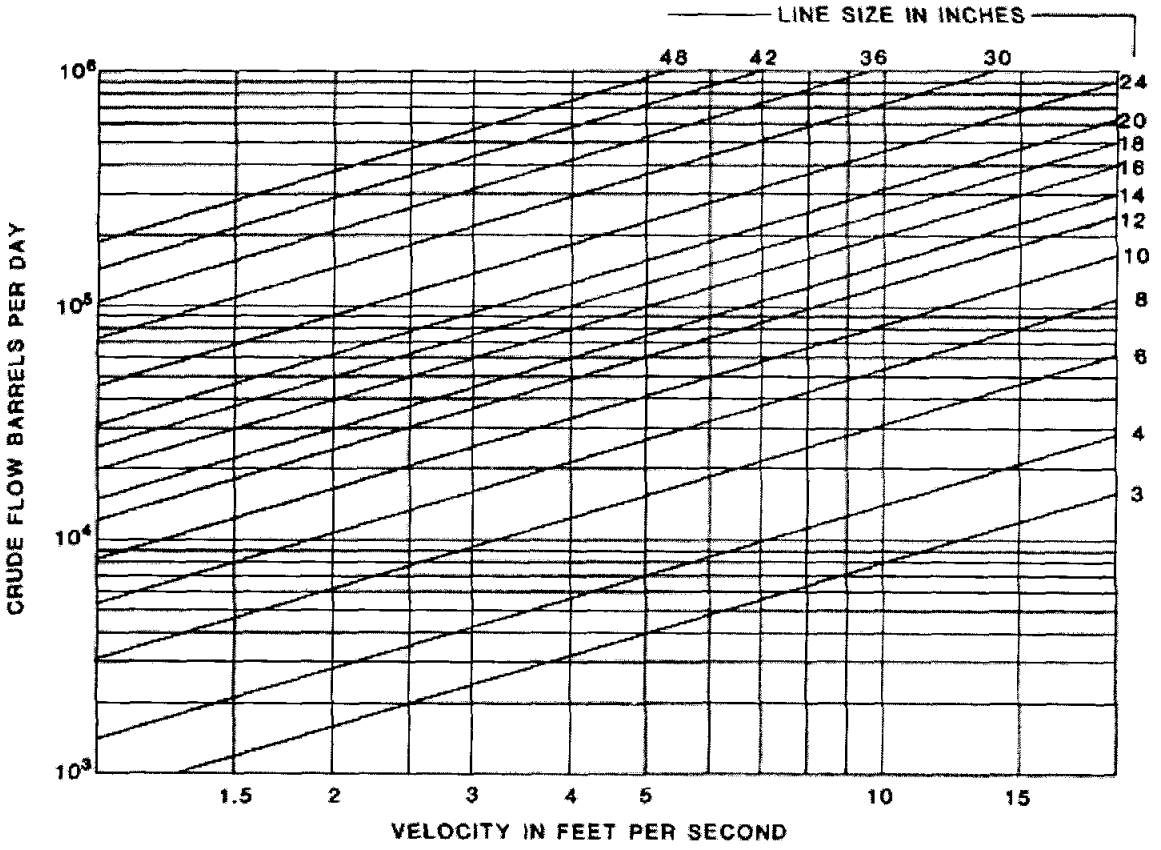

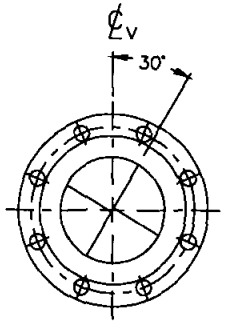

UPSTREAM END VIEW

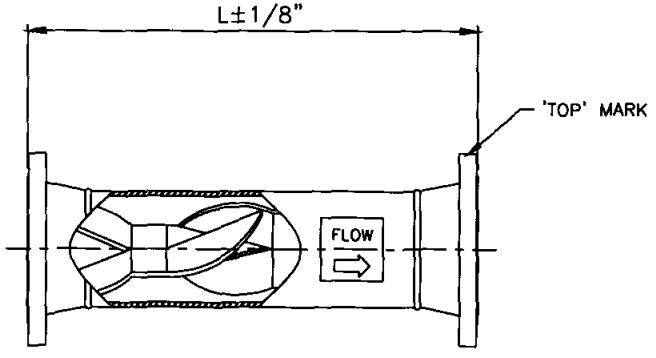

HOUSING: CARBON STEEL A106 GRADE B
SCHEDULE 40 THROUGH 10" NPS
STANDARD WALL (3/8") - 12" & LARGER.

END CONNECTIONS: 150 LB RFWN FLANGES

ELEMENTS: THREE (3) CARBON STEEL
ROTATED 30° IN CT CONFIGURATION.

TABULATION BLOCK		
MODEL NUMBER	LINE SIZE, NPS "D"	L ±1/8"
CT007-3-150W	3/4	4 1/4
CT010-3-150W	1	4 1/2
CT015-3-150W	1 1/2	7
CT020-3-150W	2	9
CT030-3-150W	3	13
CT040-3-150W	4	17
CT060-3-150W	6	26
CT080-3-150W	8	34
CT100-3-150W	10	42
CT120-3-150W	12	51
CT140-3-150W	14	56
CT160-3-150W	16	64
CT180-3-150W	18	73
CT200-3-150W	20	81
CT220-3-150W	22	89
CT240-3-150W	24	98
ALL DIMENSIONS ARE IN INCHES		

NOTES:

1. KOMAX "CT" MIXER MAY BE INSTALLED HORIZONTALLY OR VERTICALLY. WHEN INSTALLED HORIZONTALLY THE MIXER IS ORIENTED WITH THE 'TOP' MARK AT THE TOP TO ASSURE PROPER PICK-UP AND MIXING OF B.S. & W.
2. FLANGE DIMENSIONS & TOLERANCES IN ACCORDANCE WITH ANSI B16.5.

KOMAX® SYSTEMS, INC.
P.O. BOX 1323 WILMINGTON, CA 90748-1323 310-830-4320 FAX: 213-830-9826

OUTLINE & MOUNTING CONFIGURATION

STANDARD 3 ELEMENT "CT" MIXER
(WITH 150 LB RFWN FLANGES)

SCALE: NONE	APPROVED:	DRAWN BY: DP	
DATE: 02-25-92		REV. DATE:	
THIS DRAWING SUPERSEDES DRAWING NO. 7080B DRAWN 12-15-82	QUOTE NO.: JOB NO.:	CODE# 007-8	DRAWING NUMBER: 17966

Date: 1/21/2003

Time : 12:25:22 PM

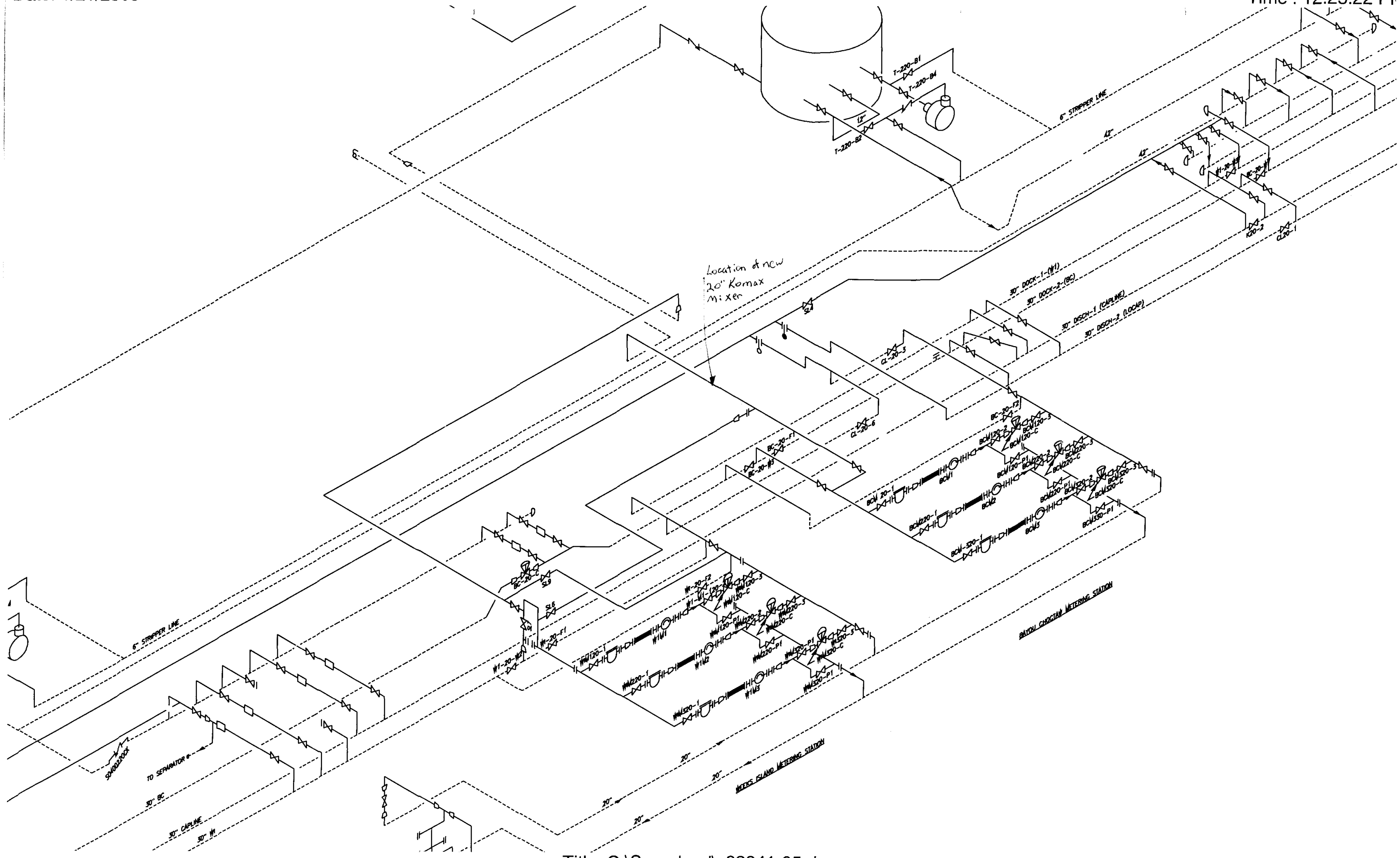

Title: C:\Sugarland\s32841-05.dwg