STRATEGIC PETROLEUM RESERVE

ENGINEERING CHANGE PROPOSAL
SUMMARY SHEET
CLASS I CHANGE

ECP NUMBER	TITLE
SJ-M/O-4616	Bayou Choctaw Gravitometer Installation

BUDGET SOURCE

- ☐ SPR BLI _____
- ☐ CONTRACTOR BASELINE
- ☐ AUD
- ☒ OTHER

AUTHORITY

☒ PCCB ☐ ECC

SCHEDULE

☐ YES
MILESTONE NUMBER _____
CMCR NUMBER _____

☒ NO

TOTAL ESTIMATED COST OF CHANGE

	FY 00	FY	FY
DESIGN			
Construction/M&O	$35,000.		
TOTAL	$35,000.		

PCCB/ECC SIGNATURES	DISPOSITION: CONCUR	DISPOSITION: NON CONCUR	DISPOSITION: DATE	COMMENTS CONDITIONS/LIMITATIONS
DOE SENIOR SITE OFFICIAL	[signature]			
APM TECHNICAL ASSURANCE	[signature]		10/24	
APM SYSTEMS AND PROJECTS	X		10/24/2000	
APM MAINTENANCE AND OPERATIONS	✓		10/24	
DEPUTY PROJECT MANAGER				
DOE CMO	[signature]			10/24/00
PROJECT MANAGER				
DEPUTY ASSISTANT SECRETARY - SPR				

PCCB/ECC ACTION

☑ FULL APPROVAL ☐ CONDITIONAL/LIMITED APPROVAL ☐ DISAPPROVAL

ECPFM(4)

STRATEGIC PETROLEUM RESERVE PROJECT PROPOSAL

(M&O CONTRACTOR FORM)

SITE(S) AFFECTED: BC

CONTRACTOR CHANGE NO.: | REV:

☒ ENGINEERING CHANGE:
☐ OTHER: (ADMIN/NON-ENGR. CHNG)

ECP NO.:SJ-M/O-4616

SECTION 1 - SUMMARY INFORMATION

TITLE: Bayou Choctaw Gravitometer Installation

SPONSOR: Jill Derise(Equilon)
ORG:.
PHONE: 504-728-7366

FUNDING/SCHEDULE IMPACT | RECOMMENDED RANK:

SOURCE	TOTAL ESTIMATED COST				SCHEDULING
☐ SPR BLI _____	FY	____	____	____	☐ NO IMPACT
☐ CONTRACTOR BASELINE					☐ NEW SCHEDULE REQ'D.
☐ O&M	DESIGN	____	____	____	☐ SCHEDULE CHANGE REQ'D.
☐ LE	CONSTRUCTION/ IMPLEMENTATION	____	____	____	☐ MILESTONE _____
☐ MM					
☐ OTHER _____	TOTAL:	35,000	____	____	☐ CMCR NO. _____
☐ BCR					

AUTHORITY

☒ **PCCB** ☒ **CLASS I**
☐ **ECC** ☐ **CLASS II**
☐ **CONTRACTOR**

FINAL DISPOSITION

☐ **APPROVE**
☐ **CONDITIONAL APPROVAL**
☐ **DISAPPROVE**
☐ **CANCEL**

SECTION II - DYNMcDERMOTT REVIEW AND APPROVAL (CLASS II)

REVIEWERS (NAME/ORG.)	CONCURRENCE YES	CONCURRENCE NO	COMMENTS:
SITE MANAGER	☐	☐	
SITE ENGINEER	☐	☐	
	☐	☐	
	☐	☐	
	☐	☐	
	☐	☐	
	☐	☐	
	☐	☐	
	☐	☐	
	☐	☐	
	☐	☐	

TRB CHAIRMAN	DATE	DISPOSITION	COMMENTS
H K Hughes	10/24/00	☐ CONCUR ☐ APPROVE ☒ ~~DISAPP.~~ NON-CONCUR ☐ CANCEL	As SSR commented SPR spend time and money to get rid of nuclear devices. We prefer Option 2.
O&M PROJECTS COORDINATOR	DATE	DISPOSITION ☐ CONCUR ☐ APPROVE ☐ DISAPP. ☐ CANCEL	

STRATEGIC PETROLEUM RESERVE

ENGINEERING CHANGE PROPOSAL

ECP NUMBER	ECP TITLE			
SJ-M/O-4616	Bayou Choctaw Gravitometer Installations			Page 1 of 1
CONTRACTOR CHANGE NO./REV	INITIATED BY: Robert Smith	DATE: 9/12/00	SUBMITTED BY: Jill Derise	DATE: 10/16/00
PRIORITY	ORG/CONTRACTOR: Equilon Pipeline LLC	PHONE NO.: 504/728-7157	ORG/CONTRACTOR: Equilon Pipeline LLC	PHONE NO: 504/728-7366
☐ EMERGENCY ☒ URGENT ☐ ROUTINE				

VALUE ENGINEERING	DRAWDOWN CRITICAL	ROM ESTIMATE
☐ VEP (MANDATORY) ☐ VEP (VOLUNTARY)	☐ YES ☐ NO	$35,000.00

DESCRIPTION:
Problems have occurred in cutting batches due to inaccurate methods of estimating batch interface. Switches made by the Equilon Control Center have resulted in larger batch interfaces (contamination) than desired.

PROPOSED SOLUTION/ENHANCEMENT
Install (2) non-intrusive Kay-Ray gravitometers at Bayou Chotaw on both the Placid 24" and Bayou Choctaw 36" pipelines. See attached drawing D-49372 indicating approximate installation locations for the gravitometers.

REASON/JUSTIFICATION
The Equilon Control Center will receive a continuous gravity reading from each line to enable accurate batch switches during deliveries. Other types of gravitometers would have required tapping into the pipe and/or excavating and building a "sump type" pit on DOE property.

CI'S AFFECTED

ENGINEER OF RECORD TECHNICAL ANALYSIS/RECOMMENDATION

IMPLEMENTATION METHOD
☐ SUBCONTRACT
☐ M&O LABOR (LOE)
☐ COMBINANTION

ENGINEER OF RECORD	DATE	DOE SSR	DATE	
Jill E. Derise	10/16/00	Robert J. Fritz	10/16/00	☑ CONCUR ☐ NONCONCUR

ECPFM(1)

STRATEGIC PETROLEUM RESERVE
ENGINEERING CHANGE PROPOSAL
CONFIGURATION CHANGE AFFECTED REPORT

"TO BE COMPLETED BY TECHNICAL REVIEW PROCESS, ENGINEERING AND CONFIGURATION MANAGEMENT ORGANIZATION DEFINED PROCESS"

ECP NO.	CONTRACTOR CHANGE NO	REV.	CHANGE CLASSIFICATION
SJ-M/O-4616			☒ CLASS I ☐ CLASS II PAGE 2 OF _____

FUNCTIONS AFFECTED			DOCUMENTS AFFECTED		
Y	N	ITEM	Y	N	ITEM
		LEVEL 1 ☐ II ☒ III ☐ CRITERIA			ELECTRICAL
		PERFORMANCE CRITERIA			315 - CATHODIC PROTECTION
		RAM			350 - STANDARDS
		INTERFACE CHARACTERISTICS			INSTRUMENTATION
Y		I/O POINTS			401 - BLOCK DIAGRAM
		DOE LEVEL I, II, III SCHEDULES	Y		402 - LOOP DIAGRAMS
		GUARANTEES/DELIVERABLES			403 - INSTRUMENT PLANS AND DETAILS
		SAFETY/ENV/FP (CIRCLE ONE)	Y		404 - INSTRUMENT WIRING DIAGRAM
		SECURITY REQUIREMENTS	Y		409 - INSTRUMENT INDEX
		OPCS SOFTWARE			450 - STANDARDS
		OPCS HARDWARE			MAPPING
		OPCS FIRMWARE			501 - ALIGNMENT SHEETS
		RANGES/ I/O POINTS			509 - PIPELINE DWGS (MAINLINE VALVES, DRIPS, SCRAPER, TRAPS
		DIP SWITCH SETTINGS/JUMPERS			550 - STANDARDS
		MASTER CI LIST			ARCHITECTURAL
		WELLHEAD CONFIGURATION			720 - ELEVATIONS AND FLOOR PLANS
		SPARES/PROVISIONING REQUIREMENTS			750 - STANDARDS
		OPERATIONS MANUALS			DOCUMENTATION
		MAINTENANCE MANUALS			900 - RESERVED
		GOVERNMENT FURNISHED EQUIPMENT			901 - TECHNICAL/PERFORMANCE/DESIGN CRITERIA
		ENERGY USAGE			910 - DESIGN DESCRIPTION/BASIS
		VALUE ENG. (COST SAVINGS)			911 - PROCESS SET POINT DOCUMENTS
		OPERATIONS MODELS			912 - EQUIPMENT LIST
		OTHER			913 - MOV LIST
DOCUMENTS AFFECTED					915 - ELECTRICAL SAFETY
Y	N	ITEMS			920 - I/O DOCUMENT
		PIPING			930 - OPERATION AND MAINTENANCE MANUALS
		101 - PROCESS FLOW DIAGRAMS			950 - STANDARD SPECIFICATIONS
		102 - MECHANICAL FLOW DIAGRAMS			970 - TASK SPECIFICATIONS
Y		103 - PIPING AND INSTRUMENTATION DIAGRAMS (P&ID'S)			990 - CONFIGURATION MANAGEMENT REPORTS 1.B.0.M
		104 - UTILITY FLOW DIAGRAMS			999 - RESERVED
Y RMC		105 - GENERAL PIPING PLANS	COMMENTS:		
		106 - AREA PLANS (MECHANICAL EQUIPMENT LOCATION)			
		122 - WELLLHEAD DRAWINGS			
		130 - VALVE LIST			
		135 - LINE LIST			
		140 - PSV LIST			
		150 - STANDARDS			
		CIVIL/STRUCTURAL			
		201 - PLOT PLANS			
		202 - SITE WORK, GRADING (ROUGH & FINISH DRAINAGE FENCING			
		210 - FOUNDATIONS: LOCATION PLANS			
		216 - MINES (WEEKS ISLAND ONLY)			
		250 - STANDARDS			
		ELECTRICAL			
		301 - AREA CLASSIFICATION			
		302 - ONE LINE DIAGRAMS			
Y		303 - SCHEMATIC DIAGRAMS			
		304 - POWER PLANS AND DETAILS			
		305 - LIGHTING PLANS AND DETAILS			
		307 - SUBSTATION PLANS AND DETAILS			
Y		308 - WIRING DIAGRAMS			
		310 - GROUNDING			
Y		311 - CONDUIT & CABLE SCHEDULES (INCLUDING INSTRUMENTS)			
		313 - MCC/SWITCH GEAR EVALUATION & SCHEDULE			

ENGINEERING	DATE	CONFIGURATION MANAGEMENT	DATE
		Patrick M. Chael	10/24/00

KAY-RAY® Model 3680

Product Data Sheet
102-136800-A00
Revision Date 1/98

Smart Density Transmitter

- Non-intrusive Density Measurement
- Accuracy up to ±0.0001 g/cc
- Measurements in Density Units, Degrees API, or % Consistency
- Accepts All Voltages From 90 to 250 VAC 50/60 Hz and/or 18 to 36 VDC
- HART® Protocol
- Menu Driven Through the HART® Communicator
- Continuous Self-Diagnostics

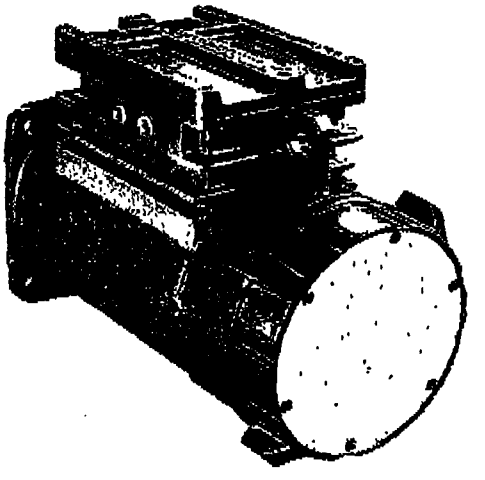

INTRODUCTION

The innovative Model 3680 Smart Density Transmitter redefines the standard for gamma-based density measurement.

It combines an improved scintillation-based detector with the power of a "smart" transmitter in an explosion-proof, three-compartment housing.

Since the system is completely non-intrusive, it is not affected by pressure, viscosity, corrosives, or abrasives. The system simply mounts around the existing process pipe. This eliminates the need for pipe modification and process downtime during installation.

Advanced scintillation technology, rugged packaging, and communication through the hand-held HART® Communicator together comprise a system that meets today's and tomorrow's measurement and communication needs.

PRINCIPLES OF OPERATION

The Model 3680 Smart Density Transmitter uses the proven technology of gamma beam attenuation for its continuous real-time monitoring of process density. The density transmitter mounts on a process pipe opposite the source housing so that it is in the direct path of a gamma beam emitted through the process pipe from the source housing (gamma beams have characteristics similar to medical X-rays). The amount of gamma energy which passes completely through the pipe is inversely proportional to the density of material within the pipe. The Model 3680 Smart Density Transmitter's scintillation-based detector produces photons of light when exposed to the gamma beam which are amplified through a photo-multiplier tube. The number of pulses from the scintillation-sensor electronics is directly related to the intensity of the gamma energy received. These pulses are conditioned, counted, and scaled by the transmitter's on-board microprocessor to provide process-density information.

Accurate

The Model 3680 uses advanced scintillation detection and precise drift compensation to produce a density measurement system with superior performance.

Scintillation detection provides a typical repeatability of ±0.0015 SGU using low radiation fields. Enhancements to this value can be made through longer time constants or larger radiation fields.

Drift caused by source decay is compensated for, and ambient temperature shift is negligible, providing greater accuracy than traditional sodium iodide crystal-based systems. This drift compensation, when combined with the scintillation detector, produces accuracy up to ±0.0001 g/cc depending upon field calibration, reference data and system configuration.

Reliable

The Model 3680 is designed for dependability and long life, featuring a rugged housing, reliable electronics, and intrinsically safe communications.

The rugged housing (epoxy paint coated aluminum alloy) is water and dust-tight. Its three compartments are self-contained, making the field wiring-terminals accessible without exposing the electronics to the ambient environment.

The electronics used in the transmitter are not affected by fluctuations in the power supply within the specified range. If power is interrupted, the electronics stores the configuration data in non-volatile memory. Upon re-establishment of power, the transmitter is immediately fully functional.

Communication with the HART® Communicator interface is conducted through a separate, intrinsically safe terminal or via the 4–20 mA loop.

Flexible

The Model 3680 provides flexibility by automatically adapting to the supplied power source, accepting input for temperature compensation and allowing user-defined adaptive damping and units of measure.

The Model 3680's electronics automatically adapt to almost any AC or DC power source supplied and switches to backup DC power when it is provided. All voltages from 90 to 250 VAC 50/60 Hz and 18 to 36 VDC are accepted.

Through the use of an optional 3-wire RTD or 4–20 mA temperature transmitter, the Model 3680 can compensate for density changes caused by fluctuations in process temperature.

The adaptive damping feature provides a method to quickly respond to changes in the process. Users define the threshold setting as a percentage of full-scale output and the fast-damping time.

Measurements

The user can configure the Model 3680 for use in most industries by selecting one of the following units of measure.

Available Units of Measure	
SGU*	%sol-weight
g/cc	%sol-volume
g/ml	deg.twaddle
kg/liter	deg.Baume-Hv
kg/cumtr	deg.Baume-Lt
g/liter	deg.API
lb/cuin	deg.Brix
lb/cuft	tons/cuyd
lb/gal	

*Used as display units on HART® Communicator for a standard SGU, SGU/60, and consistency applications.

The stability and repeatability requirements for °API, SGU/60, and consistency applications are more demanding than those for most density applications. The Model 3680 is specifically designed to meet these demanding requirements (see product nomenclature on back page). Additionally, the Model 3680 incorporates a proprietary temperature-correction algorithm for consistency and other aqueous-based percentage-solid measurements to ensure the highest performance available.

Easy to Use

The Model 3680's menu-style interface, continuous self-diagnostics, and modular construction make operation easy for even the novice user.

The Model 3680 self-diagnostics continually provide system-status updates for the HART® Communicator's display. Should an error be detected, diagnostic messages will appear to assist in isolating and correcting the problem.

Although the Model 3680 has been ruggedly constructed to withstand long-term field use under a wide range of adverse conditions, it continually self checks its electronics module and sensor for timely fault detection in the unlikely event that any such faults occur. Its design allows for easy on-site replacement of the electronics module without compromising the Model 3680's precision and accuracy.

COMMUNICATION FEATURES

The model 3680 can be interrogated and configured locally, remotely, or in the control room using either a HART® Communicator or a HART® compatible control-system communication interface, both of which have access to the same data. On-screen prompting through these interfaces lead the user through interrogation and configuration processes.

The HART® Communicator Interface

The HART® Communicator can be used to configure the transmitter from any wiring termination point in a 4–20 mA loop, in the control room or otherwise. Real-time data exchange with the HART® Communicator does not interrupt the transmitter output signal. In addition, the user can enter configuration data into the HART® Communicator off-line (while not connected to the Model 3680), causing the data to be stored in non-volatile memory, which, as an example, can be subsequently downloaded into one or more transmitters at any number of application sites.

When the HART® Communicator is connected to the transmitter output loop, it identifies the Model 3680 and offers a choice of functions. Communication with the Model 3680 facilitates four major processes: off-line configuration of the transmitter, testing of the system, online configuration of the transmitter, and application-specific formatting/calibration of the transmitter. Continual real-time monitoring of the process variables is available at all stages of applying theses options.

Transmitter

The transmitter is a self-contained three-compartment unit, which houses the scintillation detector and all processing electronics. It can be mounted on either horizontal or vertical piping and has several communication ports for flexibility in providing accurate output signaling. Although the main output is processed digitally and converted to a standard 4–20 mA analog signal, the signal can also be provided in digital format (Bell 202 or RS 423) using the HART® (Highway Addressable Remote Transmitter) communications protocol either superimposed upon the 4–20 mA analog signal or via a separate intrinsically safe local connection at the transmitter.

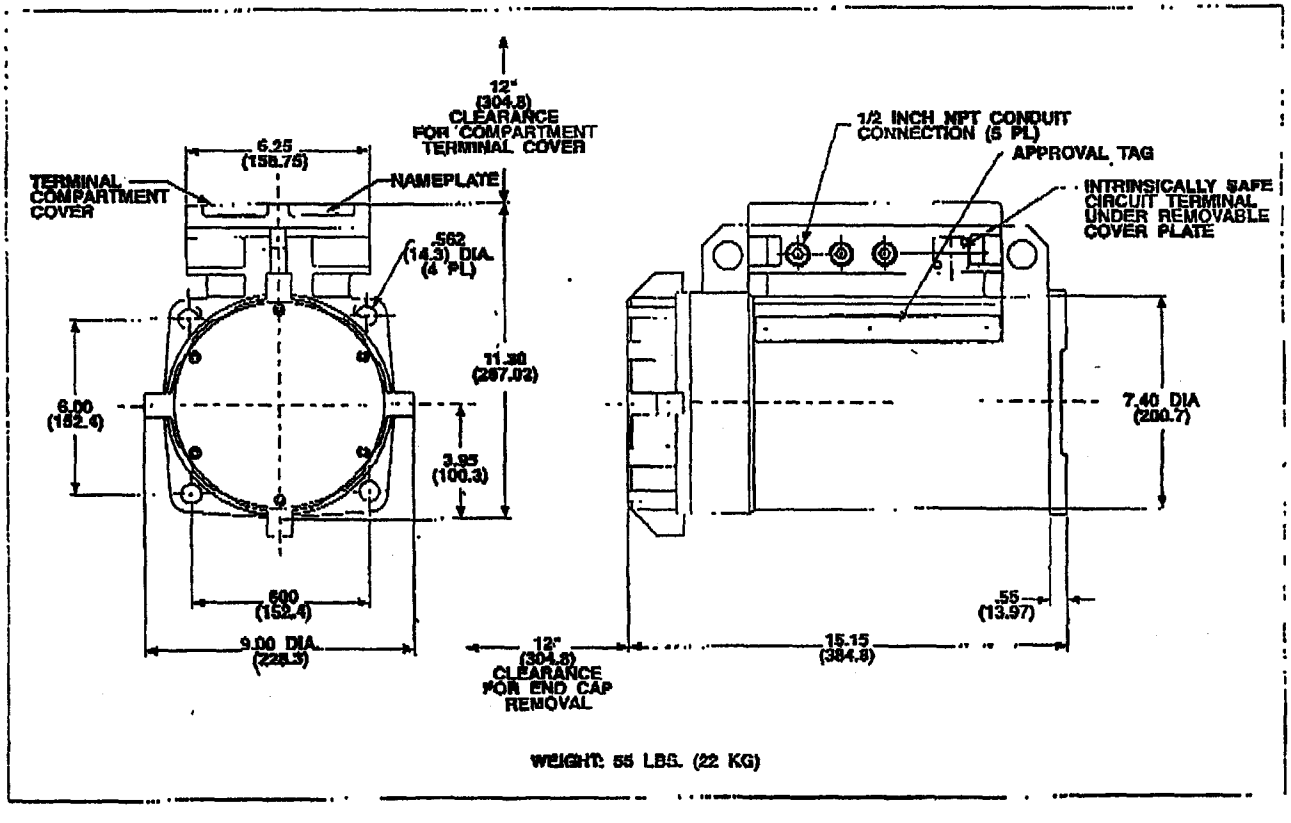

SOURCE HOUSING

The source housing, containing a single gamma source capsule, directs a beam of gamma energy through the process pipe into the detector. A lockable, two-position (open/closed) shutter mechanism is used to shield the gamma beam during transportation and installation. A lead-filled source housing, constructed of either carbon steel or stainless steel, provides shielding.

The source housing comes in several sizes depending on the application and surface radiation requirements of the application. In addition, source mounting saddles are available to firmly attach the source housing to the pipe for proper alignment and maximum detector efficiency.

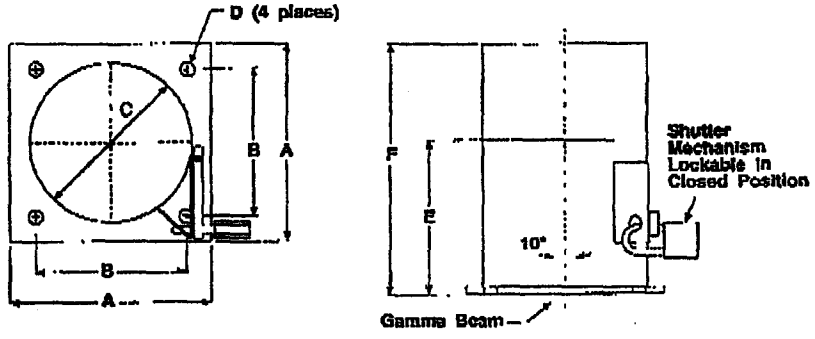

SOURCE HOUSING DIMENSIONS
LENGTHS IN INCHES [MM], WEIGHT IN LBS [KG]

MODEL #	HOUSING MATERIAL	A	B	C	D	E	F	WEIGHT
7062BP	Stainless	5 [127]	4 [102]	4-5/8 [117]	7/16 [11.1]	4-3/16 [106]	6-3/4 [171]	24.0 [11.0]
7063P	Carbon	8 [203]	6 [152]	6-1/4 [159]	9/16 [14.3]	6-1/4 [159]	10-1/8 [257]	95.0 [43.0]
7063PS	Stainless	8 [203]	6 [152]	6-1/4 [159]	9/16 [14.3]	6-1/4 [159]	10-1/8 [257]	95.0 [43.0]
7064P	Carbon	9 [229]	7-1/2 [191]	8-5/8 [219]	9/16 [14.3]	8-7/16 [214]	12 [305]	190.0 [86.0]

SOURCE SIZE AND SURFACE RADIATION

MODEL	MILLICURIESmCi[MBq]									
	5 [185]	10 [370]	25 [925]	50 [1850]	100 [3700]	200 [7400]	500 [18500]	1000 [37000]	2000 [74000]	5000 [185000]
7062BP	2.4/0.1 [24]/[1]	4.8/0.2 [48]/[2]	12/0.6 [120]/[6]	24/1.2 [240]/[12]	48/2.4 [480]/[24]	X X	X X	X X	X X	X X
7063P/7063PS	B B	0.2/A [2]/[A]	0.5/0.05 [5]/[0.5]	1/0.1 [10]/[1]	2/0.2 [20]/[2]	4/0.4 [40]/[4]	10/1 [100]/[10]	20/2 [200]/[20]	40/4 [400]/[40]	X X
7064P	B B	B B	B B	0.5/0.05 [5]/[0.5]	1/0.1 [10]/[1]	2/0.2 [20]/[2]	5/0.5 [50]/[5]	10/1 [100]/[10]	20/2 [200]/[20]	50/5 [500]/[50]

Surface radiation (mr/hr) installed [mSV/hr]

5/0.5
[50]/[5]

Typical Radiation 12" from surface (mr/hr) installed [mSV/hr]

A = Below or at background
B = Not Standard
X = Not Available

7062B — Max. mCi [MBq] = 100 [3700]
7063/7063S — Max. mCi [MBq] = 2000 [4000]
7064 — Max. mCi [MBq] = 5000 [185000]

PIPE SADDLE

The pipe saddle firmly holds the source housing and detector against the pipe to help ensure maximum exposure of the detector to a properly installed source-housing gamma beam.

Although not shown below, standard pipe saddles are available for pipes up to 24 inches in diameter. Please consult factory for larger pipe sizes.

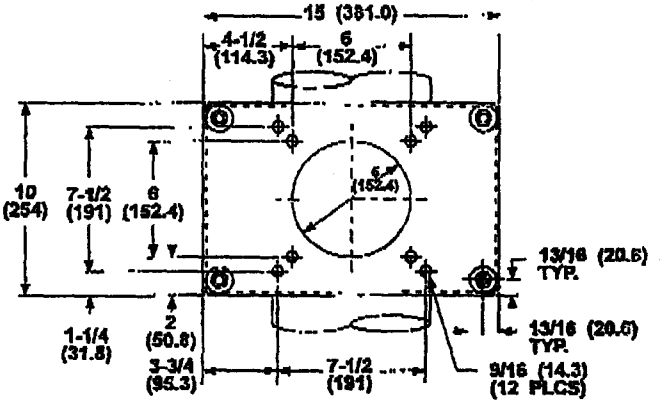

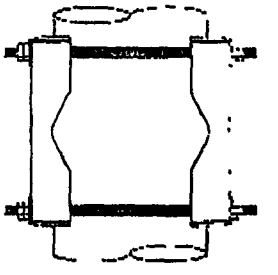

DETECTOR SIDE SHOWN

PIPE SADDLE PART NUMBER	NOM. PIPE SIZE IPS	PIPE O.D. "X"	WIDTH "Y"
110-761002	2.0"	2-3/8"	4-9/16"
110-761003	3.0"	3-1/2"	5-13/16"
110-761004	4.0"	4-1/2"	6-15/16"
110-761005	5.0"	5-9/16"	8-1/8"
110-761006	6.0"	6-5/8"	9-5/16"
110-761008	8.0"	8-5/8"	10-5/16"
110-761010	10.0"	10-3/4"	12-11/16"
110-761012	12.0"	12-3/4"	14-7/8"

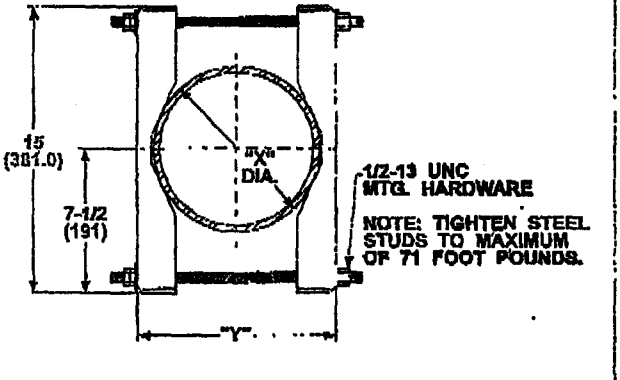

NOTES:
1. Saddle to be mounted vertical for 2" to 6" Dia. Pipe.
2. Saddle to be mounted horizontally for 8" to 12" Dia. Pipe.
3. In both installations rectangular slot is at top.
4. Bracket construction 7 Ga. hot rolled steel.
5. Finish: Cadmium plated (hardware zinc plated, clear chromate).
6. Approx. weight 33 lbs. (15 kgs.)
7. Pipe saddle provided with hardware for mounting the detector and source housing to respective pipe saddle half. Hardware Finish: Zinc Plated, Clear Chromide.
8. Pipe saddles for pipes larger than 12" dia. are available. Consult factory for specifications.

INSTALLATION OPTIONS

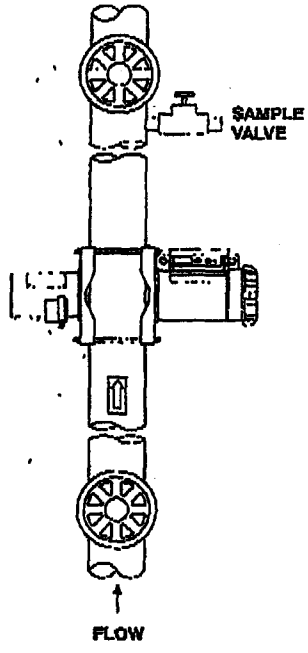

Vertical Pipe Installation With Isolation Valves (Front View of 3680)

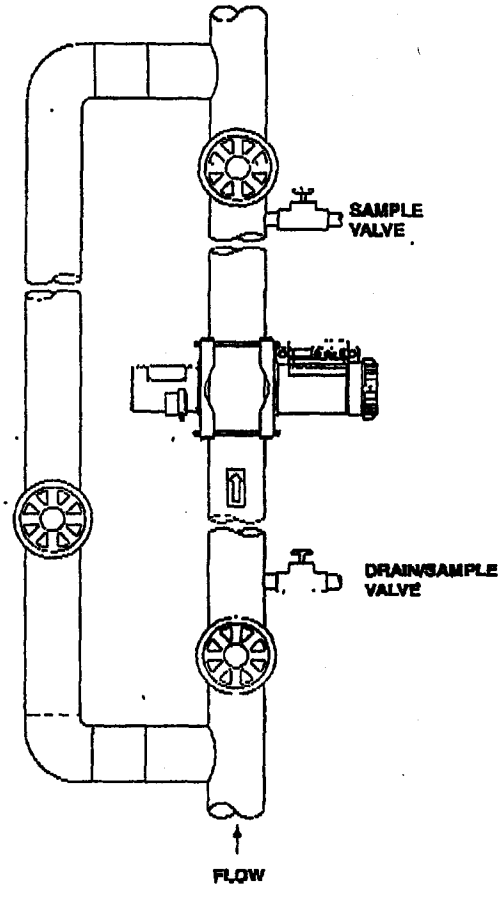

Vertical Pipe Installation with Bypass (Front View of 3680)

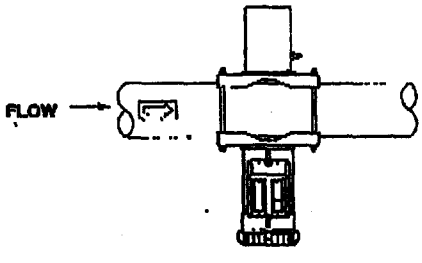

Horizontal Pipe Installation (Top View of 3680)

CAUTION:
Additional mechanical support may be required when mounting this system on small-bore pipework to ensure adequate strength.

APPROXIMATE SYSTEM WEIGHT	SOURCE HOUSING MODEL NO.
115 LBS. (52 KG.)	7062BP
185 LBS. (84 KG.)	7063P/7063PS
280 LBS. (127 KG.)	7064P

SPECIFICATIONS FOR MODEL 3680 SYSTEM

Performance Specifications

Accuracy:
Maximum accuracy of ±0.0001g/cc. Dependent upon field calibration, reference data, and system configuration

Repeatability:
±0.0015g/cc(99%confidence)typicalconditions

Stability:
Drift less than ±0.05% of radiation change over 6 months

Resolution:
Analog output 16 bit internal instrumental IEEE 754 floating point

Magnetic Field Effect:
No effect on output when tested to IEC 770 para. 6.2.9

Ambient Temperature Effect:
±0.009% of radiation change per °C
±0.006% of radiation change per °C for 3680XB designated transmitters

Surface Radiation:
Maximum surface radiation (with no additional shielding) of 0.75 mR/hr for:

- Pipe sizes 10 inch (250 mm) and 12 inch (300 mm) with a 100 mCi source
- Pipe sizes 8 inch (200 mm) and less with a 50 mCi source

EMI/RFI Effect:
No effect on output when tested to:

- IEC 801-2 level 3 air discharge ESD
- IEC 801-3 RFI from 10–1000 MHz and field strength up to 30 V/M

Power Supply Effect:
No effect on operation over specified power supply ranges

Functional Specifications

Detector/Electronics:

- Power Supply: All voltages from 90 to 250 VAC 50/60 Hz and/or 18 to 36 VDC. Unit automatically switches to DC backup (if available) with no loss of signal
- Power Consumption: 15 watts maximum

Operating and Storage Temperature Limits:
Operating: -4 to 122°F (-20 to 50°C)
Storage: -22 to 149°F (-30 to 65°C)

Input for Temperature Compensation (optional):
RTD three-wire 100 ohm temperature sensor and 4–20 mA temperature transmitter inputs. Internal 24 VDC source is available to power the temperature transmitter

Output Signals:

- 4–20 mA, internally powered, up to 500 ohm load
- RS 423 or Bell 202 interface with HART® protocol
- Digital signal superimposed on 4–20 mA signal using HART® protocol, available for control system interface
- Digital signal available via intrinsically safe connection for HART® Communicator

Source Decay Compensation:
Selectable: Cs-137, Co-60, or Am-241

Linearization:
Logarithmic and multipoint characterization

Analog Output Adjustment:
Engineering units and range values user-selected. All analog trim and adjustments made through software commands

Adjustable Damping:
Adjusts between 0.5 seconds and 600 seconds in 0.5 second increments.

Adaptive Damping:
Optionally selectable *On* or *Off* with 0.5 to 30 second time constant adjustable in 0.5-second increments. Activation threshold adjustable from 0-100% of span

Physical Specifications

Electrical Connections:
Five 1/2-NPT conduit connections (PG 13.5 (PG 11) and CM20 conduit with adapter). Barrier terminal strips accept #12 AWG and smaller wiring or 0.312 inch wide spade tags. HART® Communicator interface connects directly into 4–20 mA loop and/or intrinsically safe connection behind removable cover.

Materials of construction:

- Housing: Low copper aluminum alloy,
- Paint: Epoxy-polyester
- Case Seals: 'O' Rings and gaskets are Nitrile (Buna-N) rubber

Weight:
Detector/Electronics 55 lbs (22 kg)

Factory Mutual (FM) Approved:
Class I, Division 1, Groups B, C, & D
Class II, Division 1 & 2, Groups E, F & G
Class III Division 1 & 2
AIS, NEMA 4X

Canadian Standards Association (CSA) Certified:
Class I, Division 1, Groups B, C, & D
Class II, Division 1 & 2, Groups E, F, & G
Class III, Division 1 & 2
[Exia], Enclosure 3

BASEEFA (CENELEC) Certified for:
EExd (ia) IIB + H2 T6

The selection of Model 3680 Smart Density Transmitter components is determined by pipe size, accuracy (repeatability) requirements, and surface-radiation shielding requirements. To determine the proper selection of system components, please contact your local Kay-Ray sales representative and complete an application questionnaire (Form 102-210000).

- HART® Communicator
- Model 7637 "Snake" strap-on Platinum RTD Sensor (no hazardous location approvals)
- Rosemont Model 751 Local 4-20 mA indicator.

LABELS/APPROVALS

C	English/French Canadian:			
	FM	Class I Div. 1, Groups B, C, & D Class II, Div. 1 & 2, Groups E, F, & G Class III, Div. 1 & 2 AIS, NEVA 4X	CSA	Class I Div. 1, Groups B, C, & D Class II, Div. 1 & 2, Groups E, F, & G Class III, Div. 1 & 2 [Exia], Encl. 3
F	English/French: BASEEFA (Cenelec) EExd (ia) IIB + H2 T6			
G	English/German: BASEEFA (Cenelec) EExd (ia) IIB + H2 T6			

TRANSMITTER

A	Standard Transmitter
B	API/SGU 60/Consistency Transmitter

PIPE MOUNTING BRACKET

00	No Pipe Saddle
B	2 inch (50 mm) Radial Pipe Saddle
C	3 inch (75 mm) Radial Pipe Saddle
D	4 inch (100 mm) Radial Pipe Saddle
E	6 inch (150 mm) Radial Pipe Saddle
F	8 inch (200 mm) Radial Pipe Saddle
G	10 inch (250 mm) Radial Pipe Saddle
H	12 inch (300 mm) Radial Pipe Saddle
I	14 inch (350 mm) Radial Pipe Saddle
J	16 inch (400 mm) Radial Pipe Saddle
K	18 inch (450 mm) Radial Pipe Saddle
L	20 inch (500 mm) Radial Pipe Saddle
M	24 inch (600 mm) Radial Pipe Saddle
OS	Special Mounting

36" 1000 milliCuries
24" 500 milliCuries

SOURCE SIZE/TYPE

0000	No Source
001C	1 mCi Cs 137
005C	5 mCi Cs 137
010C	10 mCi Cs 137
025C	25 mCi Cs 137
050C	50 mCi Cs 137
100C	100 mCi Cs 137
200C	200 mCi Cs 137
500C	500 mCi Cs 137
SS	Special Source

SOURCE HOUSING

0	No Source Housing
1	100 mm Diameter Source Housing (7062BP)
2	150 mm Diameter Source Housing (7063P)
3	150 mm 304SS Diameter Source Housing (7063PS)
4	200 mm Diameter Source Housing (7064P)
S	Special Source Housing

3680-C	A	D	010C	1	TYPICAL NONEMCLATURE

Specifications are subject to change without notice. KAY-RAY is a mark of Kay-Ray Sensall, Inc. HART is a trademark of the HART Foundation.

CE The Kay-Ray/Sensall Model 3680 satisfies all obligations coming from legislation to harmonize product requirements in the European Union.

Kay-Ray/Sensall, Inc.
1400 Business Center Drive, Suite 100
Mount Prospect, IL 60056-6063 USA
Tel: (847) 803-6100
Fax: (847) 803-5468

Kay-Ray/Sensall

KAY-RAY® Model 3680

°API Pipeline Interface Detection

This application brief describes key characteristics of the Model 3680 as used in multi-product pipeline and terminal operations. The Model 3680 is manufactured by Kay-Ray/Sensall.

TOTAL PIPELINE INTEGRITY

Growing environmental regulations and associated penalties have made spill and leak prevention a major concern of pipeline operators. The installation of pipeline instrumentation where it intrudes through the pipe wall must address pipeline integrity.

The Model 3680 can be installed on an existing pipeline without any cuts or intrusion through the pipe wall, there is no need for orifice plate/taps or sample lines with circulating pumps. Sensor withdrawal mechanisms and/or insertion ports are not used. Pigging and scraping operations have no impact on the Model 3680.

The picture to the right shows how this measurement system is mounted around an existing pipe. The 3680 will accept either an RTD or 4-20 mA temperature signal. An available end point RTD sensor that does not intrude through the pipe wall is available.

UP TO ±0.25 °API REPEATABILITY

Reliable product change detection is important to all multi-product pipeline operations. Although detection of a change in product can be done via manual samples, this method is not practical or cost effective to conduct at every point in the pipeline. A change in gravity (g/cc or °API) can be used to indicate a change in product, unless you are measuring products that have the same gravity.

The repeatability and stability of any interface detector is best judged on its installed performance. Different technologies are influenced by sets of factors that can significantly impact the performance in the field.

The performance of the Model 3680 in pipeline service can be influenced by factors such as instrument drift/noise, pipeline size, ambient temperature shift, °API conversion accuracy and the °API range.

The following table gives an overview of the Model 3680 performance taking these factors into account. Other factors (such as dirt or moisture in the product, flow rate, and product viscosity) do not impact the function of the Model 3680.

REMOTE DIGITAL COMMUNICATION

Out station or remote batch tracking interface detectors are often located many miles from pumping stations or terminals. Although current practice is to install a Remote Terminal Unit (RTU) next to the interface detector for signal communication, this level of communication may not always be required. An RTU and its installations can cost several thousand dollars.

The Model 3680 communicates in the open HART protocol. This Bell 202 output can be directly connected to standard equipment supplied by a lease line company. A Bell 202 modem at the station interfaces with a PC or other HART host.

Several Model 3680 Smart Density Transmitters have been installed at out stations with PLCs installed back at the station and programmed to act as hosts. It is possible to have a single lease line multidrop in excess of 15 HART transmitters.

<table>
<tr><th colspan="7">Model 3680 Smart Density Transmitter °API Repeatability</th></tr>
<tr><th rowspan="2">Pipe Diameter</th><th colspan="3">±10°C Ambient Temperature Change</th><th colspan="3">±20°C Ambient Temperature Change</th></tr>
<tr><th>@ 70 °API</th><th>@ 40 °API</th><th>@ 10 °API</th><th>@70 °API</th><th>@ 40 °API</th><th>@ 10 °API</th></tr>
<tr><td>4"</td><td>±0.5°</td><td rowspan="2">±0.3°</td><td rowspan="8">±0.25°</td><td>±0.7°</td><td>±0.5°</td><td>±0.3°</td></tr>
<tr><td>6"</td><td rowspan="7">±0.4°</td><td>±0.5°</td><td>±0.4°</td><td rowspan="8">±0.25°</td></tr>
<tr><td>8"</td><td rowspan="6">±0.25°</td><td rowspan="6">±0.4°</td><td rowspan="5">±0.3°</td></tr>
<tr><td>10"</td></tr>
<tr><td>12"</td></tr>
<tr><td>14"</td></tr>
<tr><td>16"</td></tr>
<tr><td>18"</td><td rowspan="3">±0.3°</td></tr>
<tr><td>20"</td></tr>
<tr><td>24"</td><td>±0.25°</td></tr>
<tr><td colspan="7">• 120-second damping time • Schedule 40 pipe
• 99% confidence • Strap-on insulated RTD temperature sensor
• Constant line pressure • °API conversion American Petroleum Institute guidelines</td></tr>
</table>

SMART FAMILY® COMPATIBILITY

HART protocol is used by a large family of pressure, temperature, and flow products manufactured by various companies. HART® Smart Family Interface supports all of these products and the Model 3680 Smart Density Transmitter.

HART PROTOCOL

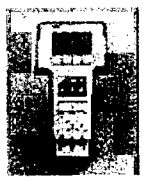

HART protocol is used in two-way communication with the pressure, temperature, valve control, and flow products of several other instrument manufacturers. A single HART communication line can handle in excess of 15 multidropped HART instruments from different instrument manufacturers. A formal HART users group consisting of insrument manufacturers meets regularly to address HART protocol implementation issues.

PIPELINE ENVIRONMENT DESIGN

The FM/CSA-approved Model 3680 Smart Density Transmitter is packaged in a three-compartment housing. One compartment contains the sensor/electronics; this compartment never needs to be opened during installation, setup, or calibration. The second compartment contains all wiring terminals and provides a water and gas tight barrier between the terminals and electronics. The third compartment contains an IS port for connection with the HART® Smart Family Interface.

The two-way communication of the Model 3680 allows all configuration and calibration to be performed locally through an intrinsically safe port or many miles away over a communication link.

QUALITY SUPPORT AND SERVICE

Kay-Ray/Sensall provides a strong service and support capability to pipeline operators. A network of local and factory service personnel is available to commission or service installations and/or train pipeline personnel.

This overview of the Model 3680 Smart Density Transmitter as used in pipeline batch change service has hopefully provided you with some useful information. If you have further questions or would like us to explore with you the value of the Model 3680 in your operations, please call or fax our Applications Engineering group.

Copyright Kay-Ray/Sensall, Inc. Performance specifications are effective with date of issue and are subject to change without notice. Kay-Ray is a registered trademark of Kay-Ray/Sensall, Inc.

Kay-Ray/Sensall, Inc.
1400 Business Center Drive, Suite 100
Mount Prospect, IL 60056-6063 USA
Tel:(847) 803-5100 Fax:(847) 803-5466

03:06PM EQUILON PIPELINE
Z:\Valve_Lndrs\gulf_coast\Miss.Valley_Distr\ _Southern_Region\d49372-00.dwg - Mike_Thompson
OCT 10 '00 11:13
02/03/99
be853771

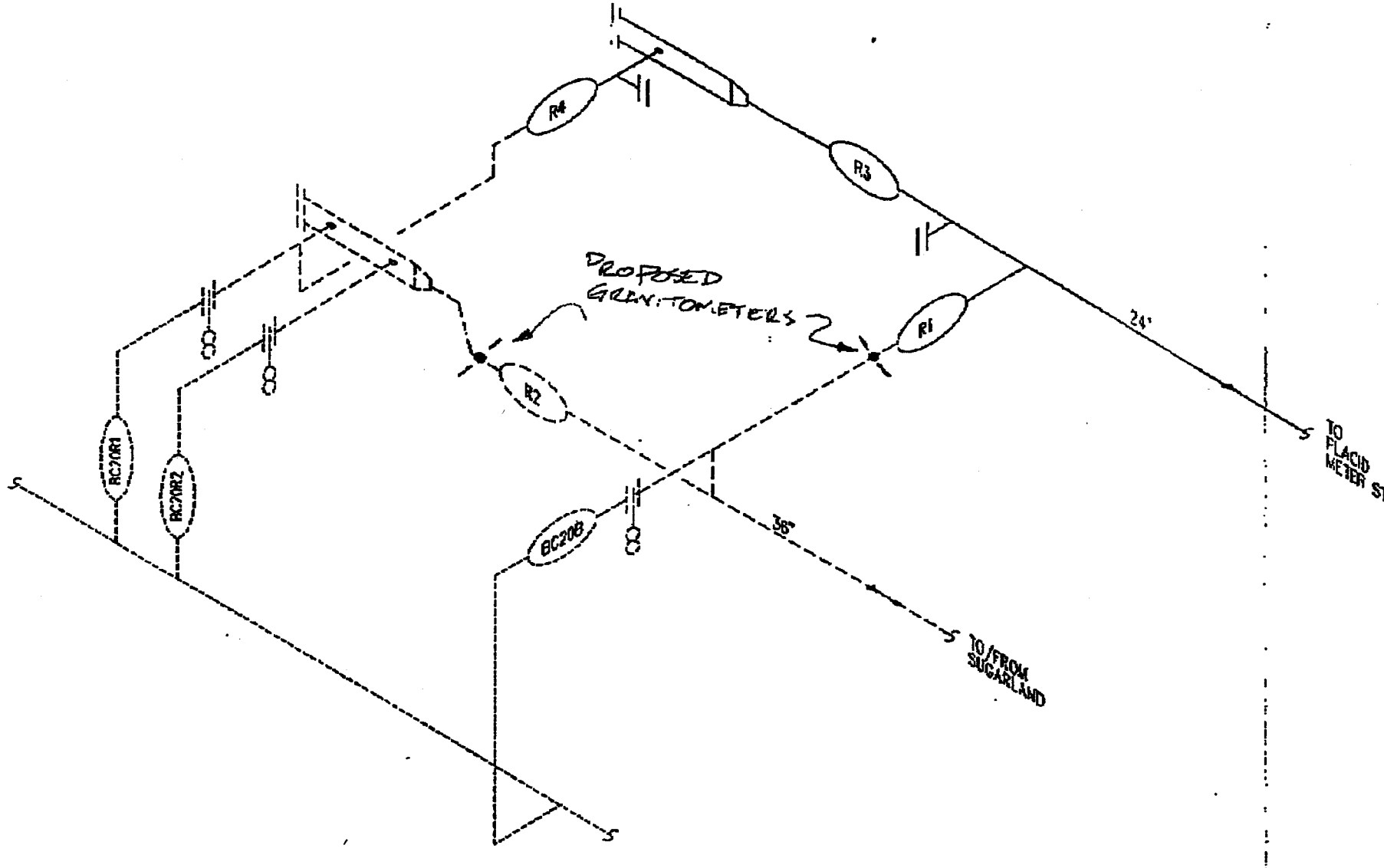

00	2/99	ORIGINAL ISSUE	MSM		MLT	MLT

24" REDSTICK PIPELINE SYSTEM

EQUILON ENTERPRISES LLC

THIS DOCUMENT IS CONFIDENTIAL AND IS THE PROPERTY OF EQUILON PIPELINE LLC. IT SHALL NOT BE REPRODUCED OR REDISTRIBUTED WITHOUT PRIOR PERMISSION. EQUILON PIPELINE LLC MAKES NO WARRENTY AS TO THE CORRECTNESS OR COMPLETENESS OF THE INFORMATION CONTAINED ON THIS DRAWING, AND THE USER ASSUMES ALL RISK OF LOSS TO PERSONS AND PROPERTY AS A

BA

SCALE NONE

April 12, 2004

To: Joseph DeCuir, PE DynMcDermont Pipeline Engineer

From: John Hayward, Shell Pipeline Field Engineer

Dear Joe,

Attached are sketches concerning the following Engineering Change Requests at the St. James (Sugarland) facility:

SJ – M/O – 4619 Firewater upgrades
The sketch shows location of the new 6" riser and valve and a detail on what was installed.

SJ – M/O – 4618 Sugarland Expansion (Acadian River Terminal)
The first sketch is a detail of the valve chart that shows where the new valves were installed. The following four sheets are 8-1/2 X 11 details of the pipe routing through the tank yard.

SJ – M/O – 4616 BC Gravitometer / Sampler Installation
The sketch is a detail from the valve chart that shows the location of the new sampler system. All vendor data on the new sampler had been provided previously.

As you can see from some of these sketches, I am not a talented draftsman. I hope the sketches meet the intent; to show location or information on what was installed. If this doe not meet your needs or you need more information, please give me a call at 618-432-5757. Thanks.

John Hayward

Date: 4/8/2004

NEW SAMPLER LOCATION
"UPGRADE SAMPLE SYSTEMS"
SJ-M/D-4616

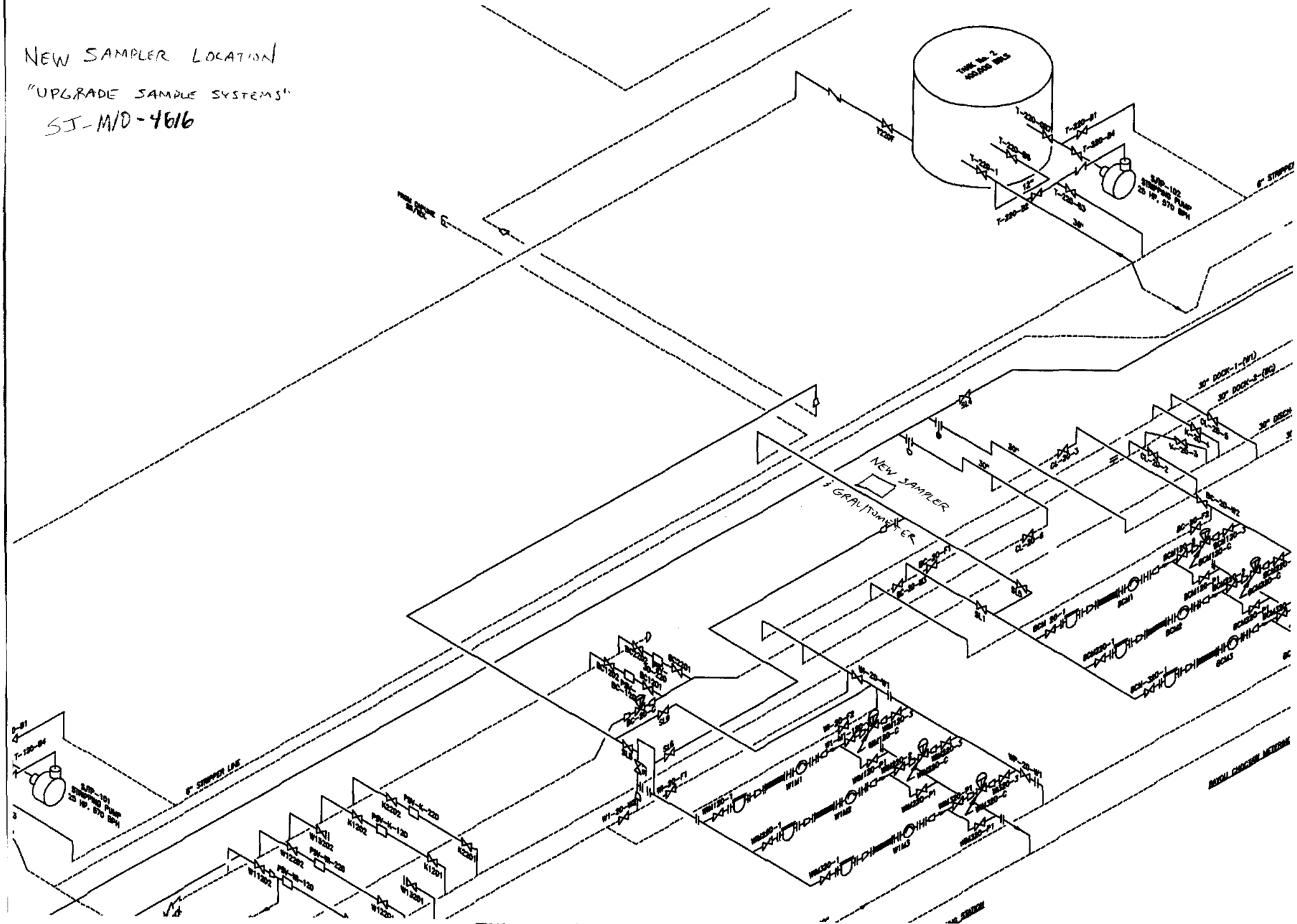

Title: C:\Apps\Green Pasture Software\Temp\s32841-05.dwg