DynMcDermott Petroleum Operations

INTEROFFICE MEMO

To:	B. Birch	EF-SJ	A. Oschwald	EF-SJ
	M. Brown	EF-22	M. Drudy	EF-86
	B. Roussell	EF-23	L. Roussel	FE-443
	D. Ryan	EF-31	J. Lawrence	EF-22
	P. Mihalik	EF-25	J. Barrington	EF-SJ
	A. Chia	EF-31		

From: Launa Zeringue

Subject: Deviation and Waiver Request

Date: October 17, 1995

Letter No.: 10771-LMZ-95-0051

Attached is a copy of Deviation SJ-D7-010, (Racking in Bus Number One Mainbreaker) for your information and file. If you have any questions please call me at x224 or B. Birch at x252.

Attachment
As Stated

SPR

DEVIATION AND WAIVER REQUEST

☑ DEVIATION ☐ WAIVER	17. D/W NUMBER SJ D7 010	REV. 0	2. CHANGE TITLE Racking in Bus Number One Main Breaker
3. DRAWING/SPEC./PROC. D/W FROM SJ-OP-930-002-005	REV. NO. 0	4. WORK ORDER/PURCHASE ORDER/CONTRACT NUMBER AFFECTED W07X4037110/S01M-062502.	
5. ADDITIONAL DOCUMENTATION AFFECTED SJ-OP-930-002-005 pg 16.			

DESCRIPTION

6. REQUIRED CONFIGURATION (FROM):

Normal operating procedure for energization of 5 KV switchgear bus number one is described in detail in paragraph 4 of section 005 of SJ site Electrical Operation Manual SJ-OP-930-002

D/W CONFIGURATION (TO):

This request calls for the racking in of the bus number one main breaker as depicted in paragraph 4.2 step [1] [2] [3] and [4] be performed prior to LP&L's energization of the substation transformer and the SPR incoming bus. Perform remaining steps after successful energization. Step [7] closing of the control switch shall be performed by electrician, using a hot stick at his discretion

7. REASON:

Personal safety.

8. NUMBER OF ITEMS 1		9. D/W EXPIRATION DATE 6/14/97	
10. SCHEDULE IMPACT NONE		12. COST IMPACT NONE	
11. D/W INITIATOR T Breaux	DATE 10/6/95	14. RESPONSIBLE ENGINEER [signature]	DATE 10/6/95
15. SITE MANAGER OR DIRECTOR [signature]	DATE 10-6-95	16. QA MRB [signature]	DATE 10/6/95.
13. ☑ MINOR CLASS II ☐ CLASS I TO DOE APM D/W BOARD		19. NOLA CONFIGURATION MGMT. (CLASS I ONLY)	DATE

20. DOE (SENIOR SITE REPRESENTATIVE) SIGNATURE (S) AND DATE(S) [signature] 10/6/95

21. REMARKS	23. EXPIRATION VERIFICATION
	22. RESPONSIBLE ENGINEER (CLASS II) FINAL DISTRIBUTION — DATE

SJ000 4750.006 DMD #41224

SJ-OP-930-002

SAINT JAMES SITE

ELECTRICAL OPERATIONS MANUAL

U.S. Department of Energy
Strategic Petroleum Reserve

DynMcDermott Petroleum Operations
Contract DE-AC96-93PO18000

000028

This is a category C controlled document and is controlled by the Publication Control Department.

This report was prepared as an account of work sponsored by an agency of the United States Government. Neither the United States Government nor any agency thereof, nor any of their employees, makes any warranty, express or implied, or assumes any legal liability or responsibility for the accuracy, completeness, or usefulness of any information, apparatus, product, or process disclosed, or represents that its use would not infringe privately owned rights. Reference herein to any trademark, manufacturer, or otherwise, does not necessarily constitute or imply its endorsement, recommendation, or favoring by the United States Government or any agency thereof. The views and opinions of authors expressed herein do not necessarily state or reflect those of the United States Government or any agency thereof.

SJ-OP-930-002
30 JUNE 1994
Revision 1 - 5 January 1996

SAINT JAMES SITE

ELECTRICAL OPERATIONS MANUAL

U.S. Department of Energy

Strategic Petroleum Reserve

DynMcDermott Petroleum Operations
Contract DE-AC96-93PO18000

NUMERICAL INDEX OF EFFECTIVE WORK PACKAGES/PAGES

List of Current Changes

Original 0..... 30 June 1994
Revision 1..... 5 January 1996
Revision 2..... 30 September 1996

Only those work packages assigned to the manual are listed in this index. Insert Revision 2 dated 30 September 1996. Dispose of superseded work packages. If changed pages are issued to a work package, insert the changed pages in the applicable work package. Total number of pages in this manual is 432 consisting of the following:

WP	Page Numbers	Revision Number	WP	Page Numbers	Revision Number
Title		1	010 00	1-20	0
Page A		1	011 00	1/(2Blank)	1
Page B		0	012 00	1/(2 Blank)	1
Page C		1	013 00	1/(2 Blank)	1
001 00	1-3/(4 Blank)	1	013 01	1-24	2
001 01	1-6	1	014 00	1-13/(14 Blank)	2
002 00	1/(2 Blank)	1	015 00	1-13/(14 Blank)	2
002 01	1-16	1	016 00	1-18	0
003 00	1/(2 Blank)	1	017 00	1-19/(20 Blank)	2
003 01	1-7/(8 Blank)	1	018 00	1-12	0
004 00	1/(2 Blank)	1	019 00	1-11/(12 Blank)	2
004 01	1-14	2	020 00	1-11/(12 Blank)	0
005 00	1/(2 Blank)	1	021 00	1-11/(12 Blank)	0
005 01	1-23/(24 Blank)	2	022 00	1-10	2
006 00	1-12	2	023 00	1-15/(16 Blank)	0
007 00	1-24	2	024 00	1-15/(16 Blank)	0
008 00	1-17/(18 Blank)	0	025 00	1-24	0
009 00	1-14	0	026 00	1-16	0
			027 00	1-15/(16 Blank)	0

Strategic Petroleum Reserve

Contract DE-AC-9693PO18000

SAINT JAMES SITE
ELECTRICAL OPERATIONS MANUAL

PUBLICATION NO. SJ-OP-930-002
ORIGINAL PUBLICATION: 30 JUNE 1994

This manual has been reviewed and approved for use at the Department of Energy, Saint James facility. This Electrical Operations Manual supersedes all electrical operating procedures currently being used at Saint James.

APPROVED BY:

H. A. Kubicek, Director
Engineering

for R. E. McGough, Director
Operations and Maintenance

for R. E. Gump, Manager
Opertions Engineering

J. W. Barrington, Site Manager
Saint James

G. A. Gross, Manager
Operations Manuals
Development Group

REVISION LOG

This Revision Log exists to document the date and description of each published modification to the manual. A sequential number is assigned for each modification date. The engineering release unit (ERU) records and approves the authorized revision for the technical library.

REV. NO.	DATE APPROVED	PAGES AFFECTED	DESCRIPTION OF MODIFICATION	ERU
0	06-30-94	All	Initial Issue.	MB
1	01-05-96	Cover page Page A Page C 002 01 003 01 005 01	Updated work packages to reflect the addition of the low resistance grounding system.	
		002 00 003 00 004 00 005 00 011 00 012 00 013 00	Deleted packages pertaining to 5KV switchgear Bus No. 2.	
		004 01 013 01	Removed note on first page of work package referring to 5KV switchgear Bus No. 2. Only the first page has been updated in these work packages.	
		001 00 001 01	Updated Table of Contents and Index to reflect deleted work packages.	
2	09-30-96	004 01 005 01 006 00 007 00 013 01 014 00 015 00 017 00 019 00 022 00	Incorporated Pan 70581 and corrected typos.	

TABLE OF CONTENTS

SAINT JAMES SITE

ELECTRICAL OPERATIONS

ELECTRICAL OPERATIONS

SAINT JAMES SITE

TABLE OF CONTENTS

List of Effective Work Package Pages

Page Number	Revision Number	Page Number	Revision Number
1 thru 3/(4 Blank)	1		

Record of Applicable Technical Directives

None

TABLE OF CONTENTS
(Sheet 1 of 2)

Title	WP Number
TABLE OF CONTENTS	001 00
INDEX OF OPERATING PROCEDURES	001 01
INTRODUCTION - VOID	002 00
INTRODUCTION	002 01
SYSTEM DESCRIPTION - VOID	003 00
SYSTEM DESCRIPTION	003 01
SYSTEM DIAGRAM - VOID	004 00
SYSTEM DIAGRAM	004 01
5KV SWITCHGEAR BUS NO. 1 - VOID	005 00
5KV SWITCHGEAR BUS NO. 1	005 01
FIRE WATER PUMP TRANSFORMER TX-FW	006 00
5KV MOTOR CONTROL CENTER MCC-A	007 00
480V MOTOR CONTROL CENTER MCC-1A	008 00
480V MOTOR CONTROL CENTER MCC-3	009 00
480V MOTOR CONTROL CENTER MCC-4	010 00
5KV SWITCHGEAR BUS NO. 2 - VOID	011 00
5KV SWITCHGEAR BUS-TIE BREAKER - VOID	012 00
5KV MOTOR CONTROL CENTER MCC-B - VOID	013 00
5KV MOTOR CONTROL CENTER MCC-B	013 01
480V MOTOR CONTROL CENTER MCC-5	014 00
480V MOTOR CONTROL CENTER MCC-6	015 00
EMERGENCY GENERATOR SET SJEG-10	016 00
480V MOTOR CONTROL CENTER MCC-1B	017 00
480V MCC-1A/MCC-1B BUS-TIE BREAKER	018 00

TABLE OF CONTENTS
(Sheet 2)

Title	WP Number
480V MOTOR CONTROL CENTER MCC-2	019 00
480V MOTOR CONTROL CENTER MCC-3E	020 00
480V MOTOR CONTROL CENTER MCC-4E	021 00
480V MOTOR CONTROL CENTER MCC-5E	022 00
UNINTERRUPTIBLE POWER SUPPLY SYSTEM	023 00
480V MOTOR CONTROL CENTER MCC-5A	024 00
5KV SWITCHGEAR DOCK NO. 1	025 00
480V MOTOR CONTROL CENTER MCC-D1	026 00
480V MOTOR CONTROL CENTER MCC-D2	027 00

INDEX OF OPERATING PROCEDURES

SAINT JAMES SITE

ELECTRICAL OPERATIONS

ELECTRICAL OPERATIONS

SAINT JAMES SITE

INDEX OF OPERATING PROCEDURES

List of Effective Work Package Pages

Page Number	Revision Number	Page Number	Revision Number
1 thru 5/(6 Blank)	1		

Record of Applicable Technical Directives

None

WP NUMBER	OPERATING PROCEDURE
005 00	5KV SWITCHGEAR BUS NO. 1 - VOID
005 01	5KV SWITCHGEAR BUS NO. 1
006 00	FIRE WATER PUMP TRANSFORMER TX-FW
007 00	5KV MOTOR CONTROL CENTER MCC-A
008 00	480V MOTOR CONTROL CENTER MCC-1A
009 00	480V MOTOR CONTROL CENTER MCC-3
010 00	480V MOTOR CONTROL CENTER MCC-4
011 00	5KV SWITCHGEAR BUS NO. 2 - VOID
012 00	5KV SWITCHGEAR BUS-TIE BREAKER - VOID
013 00	5KV MOTOR CONTROL CENTER MCC-B - VOID
013 01	5KV MOTOR CONTROL CENTER MCC-B
014 00	480V MOTOR CONTROL CENTER MCC-5
015 00	480V MOTOR CONTROL CENTER MCC-6
016 00	EMERGENCY GENERATOR SET SJEG-10
017 00	480V MOTOR CONTROL CENTER MCC-1B
018 00	480V MCC-1A/MCC-1B BUS-TIE BREAKER
019 00	480V MOTOR CONTROL CENTER MCC-2
020 00	480V MOTOR CONTROL CENTER MCC-3E
021 00	480V MOTOR CONTROL CENTER MCC-4E
022 00	480V MOTOR CONTROL CENTER MCC-5E
023 00	UNINTERRUPTIBLE POWER SUPPLY SYSTEM
024 00	480V MOTOR CONTROL CENTER MCC-5A
025 00	5KV SWITCHGEAR DOCK NO. 1
026 00	480V MOTOR CONTROL CENTER MCC-D1
027 00	480V MOTOR CONTROL CENTER MCC-D2

Table 1. Operating Procedure

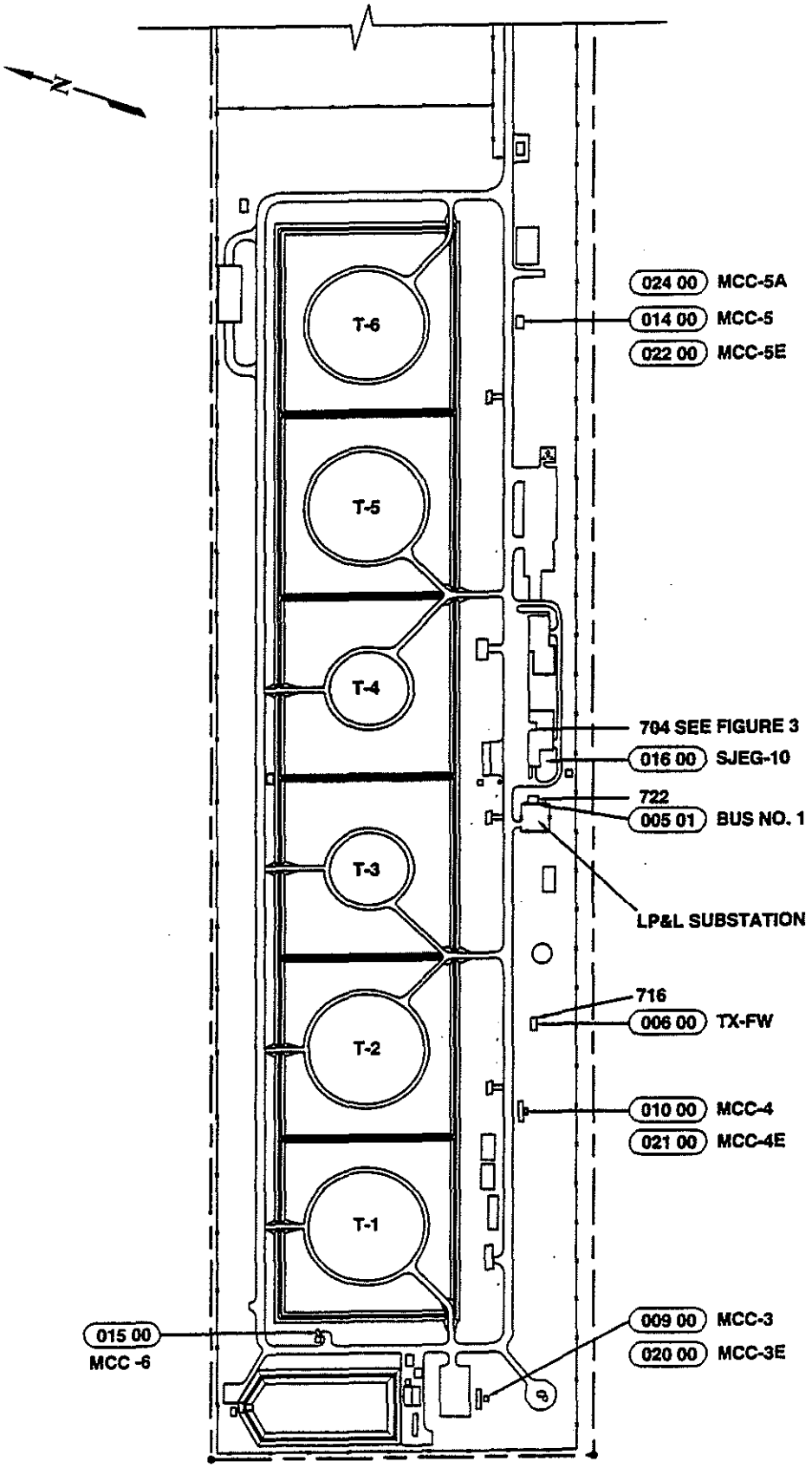

3738/MP/OMDG/J/SJ MAP/4-94

Figure 1. Site Plan

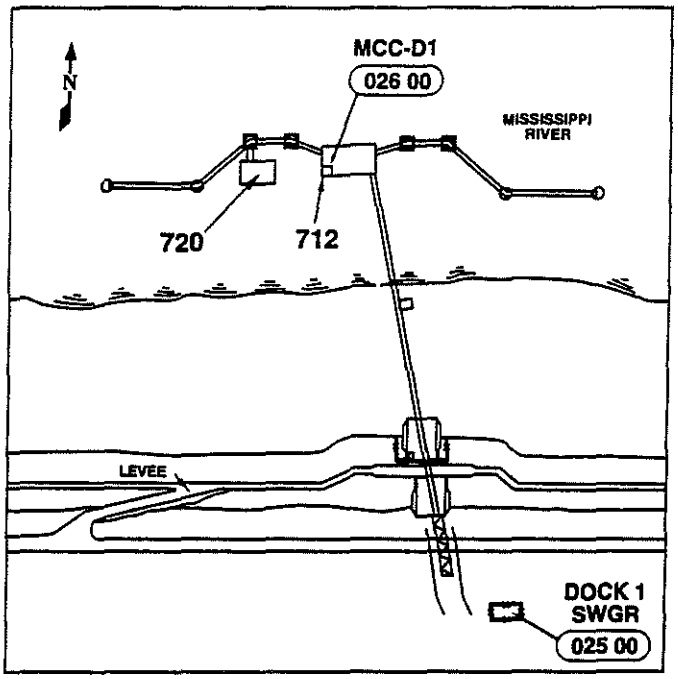

DOCK 1

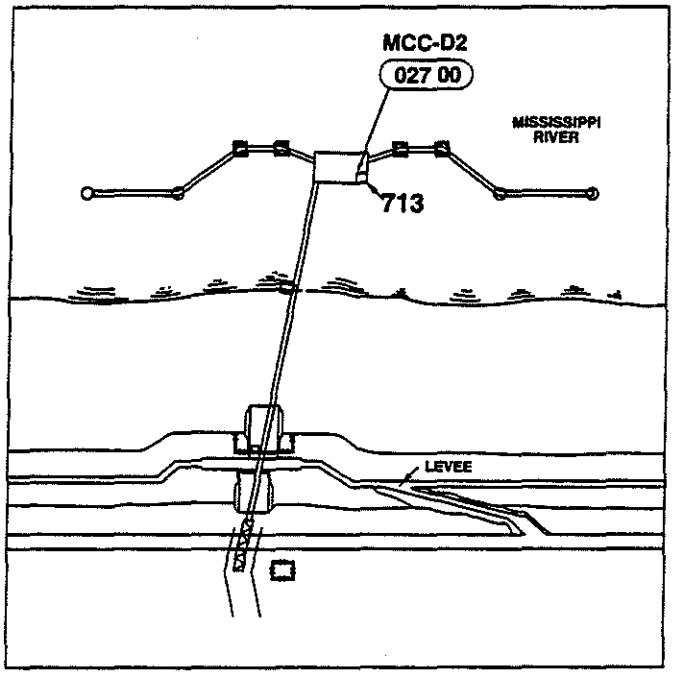

DOCK 2

3738.1/MP/OMDG/J/SJ MAP/4-94

Figure 2. Dock No. 1 and Dock No. 2 Plan

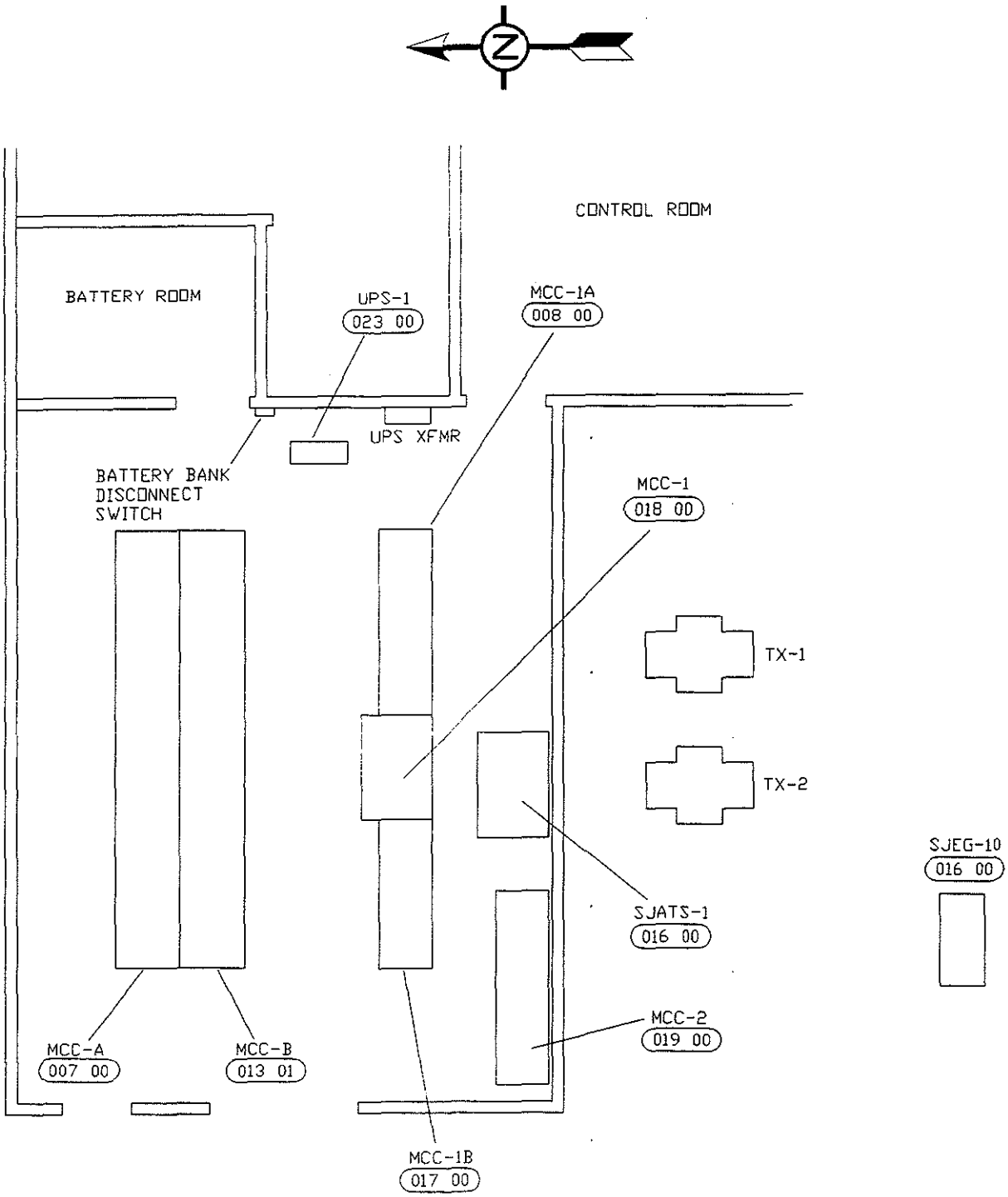

Figure 3. Control Building 704 Plan

INTRODUCTION

SAINT JAMES SITE

ELECTRICAL OPERATIONS

ELECTRICAL OPERATIONS

SAINT JAMES SITE

INTRODUCTION

List of Effective Work Package Pages

Page Number	Revision Number	Page Number	Revision Number
1/(2 Blank)	1		

Record of Applicable Technical Directives

None

NOTE

This work package has been voided. Refer to work package 002 01.

INTRODUCTION

SAINT JAMES SITE

ELECTRICAL OPERATIONS

ELECTRICAL OPERATIONS

SAINT JAMES SITE

INTRODUCTION

List of Effective Work Package Pages

Page Number	Revision Number	Page Number	Revision Number
1 thru 16	1		

Record of Applicable Technical Directives

None

NOTE 1

This manual is the basic tool for operating major electrical equipment at Saint James. To gain the maximum benefits from this manual, read and understand this introductory work package.

NOTE 2

This manual covers electrical operations under normal conditions. Under abnormal conditions, site maintenance will generate special procedures to restore operations.

TABLE OF CONTENTS

Para.	Title	Page
1.	INTRODUCTION	3
2.	PURPOSE	3
3.	SCOPE	4
4.	RECORD OF APPLICABLE TECHNICAL DIRECTIVES	4
5.	QUALITY CONTROL REQUIREMENTS	4
6.	ABBREVIATIONS AND TERMS	4
7.	ELECTRICAL SYMBOLS	4
8.	SPECIAL TOOLS AND SAFETY EQUIPMENT	5
9.	CONSUMABLE MATERIALS	5
10.	REFERENCES	5
11.	WARNINGS, CAUTIONS, AND NOTES	5
12.	WARNINGS AND CAUTIONS APPLICABLE TO HAZARDOUS MATERIALS	6
13.	HOW TO USE THIS MANUAL	6
14.	MANUAL UPDATES	7
Appendix A	Record of Applicable Technical Directives	8
Appendix B	Abbreviations and Terms	9
Appendix C	Electrical Symbols	11
Appendix D	Special Tools and Safety Equipment	12
Appendix E	Consumable Materials	13
Appendix F	Reference Materials	14
Appendix G	SPR Change Recommendation Form	15
Appendix H	Electrical Switching Order	16

1. **INTRODUCTION.**

A. The U.S. government documents used as guides in preparation of this manual are as follows:

(1) DOE-STD-1029-92, DOE Standard Writer's Guide for Technical Procedures.

(2) DOE Order 5480.19, Conduct of Operations Requirements for DOE Facilities.

(3) MIL-M-81927B, General Style and Format of Technical Manuals (Work Package Concept).

B. Electrical power distribution systems are described in work package 003 01.

C. Electrical power distribution system block diagram is presented in work package 004 01.

D. Electrical operating procedures in this manual are prepared in work package format for use with electrical power distribution systems. The Saint James electrical operating procedures are as follows:

(1) Switchgear bus no. 1 procedures are in work packages 005 01 thru 024 00.

(2) Dock no. 1 and dock no. 2 procedures are in work packages 025 00 thru 027 00.

2. **PURPOSE.**

A. Electrical operations work packages provide guidance and instructions for SPR personnel who perform normal electrical operating procedures at the Saint James Site.

B. These work packages provide specific equipment and systems data for site operations.

C. The detailed procedures in the work packages are intended to supplement and be integrated into each electrical switching order (ESO) as they are written.

D. These work packages can be used to train new or existing SPR personnel in normal electrical systems operations.

E. Under abnormal conditions, refer to Interim Repair/Mitigation Authorization Procedure, ASR4330.5.

3. SCOPE.

A. Electrical operations work packages have an introduction, purpose, scope, applicability, reference documents, precautions and limitations, prerequisite actions, and operating procedures for specific equipment as applicable. The operating procedures section contains step-by-step instructions for startup, shutdown, isolation, and automatic shutdown of electrical equipment.

B. Electrical operations work packages do not include emergency shutdown (ESD). The operating procedures for the ESD system are under the distributed control system (DCS) procedures in a separate document.

C. Refer to work package 001 01 for the Index of Operating Procedures.

4. RECORD OF APPLICABLE TECHNICAL DIRECTIVES.

A. A record of technical directives is limited to those directly affecting electrical components supported in this manual. The record is provided in all operating procedure work packages. The record indicates incorporation of information from technical directives and authorized engineering changes.

B. The record identifies the directives by type, number, category, title, and issue date. Technical directives are issued to provide instructions for changing operating procedures or to add, revise, or delete procedures or precautionary instructions. The record of applicable technical directives is listed in Appendix A.

5. QUALITY CONTROL REQUIREMENTS.

Procedures that are essential to electrical operations performance or to safety of personnel should be observed or checked by a Quality Control (QC) inspector. After a QC check, the technician proceeds to the next step. Examples of QC procedures are torque indications, gauge readings, and tasks that may be subsequently covered and not verified. Quality Control inspection points are highlighted by the addition of (QC) after the procedure or step.

6. ABBREVIATIONS AND TERMS.

Abbreviations and terms used in the Electrical Operations Manual are listed in Appendix B.

7. ELECTRICAL SYMBOLS.

Electrical symbols used in the Electrical Operations Manual are listed in Appendix C.

8. SPECIAL TOOLS AND SAFETY EQUIPMENT.

Special tools and safety equipment required for normal operating procedures are listed in Appendix D. When an item of special tools and safety equipment is not available, an approved alternate may be substituted.

9. CONSUMABLE MATERIALS.

Consumable materials required for normal operating procedures are listed in Appendix E.

10. REFERENCES.

Reference materials are documents, drawings, procedures, etc. used in the development of this manual and are listed in Appendix F.

Reference documents are documents the individual performing electrical operations must have knowledge of prior to performing electrical operations. Reference documents are listed in section 1.4 of each respective work package.

11. WARNINGS, CAUTIONS, AND NOTES.

Procedures or practices that, if not correctly followed, could result in injury to personnel or damage or destruction of equipment, are highlighted by cautions or warnings. Warnings and cautions precede the text to which they apply. Notes may precede or follow the step as applicable. Warnings, cautions, and notes do not contain procedural steps. When a warning, caution, or note consists of two or more paragraphs, each paragraph is numbered. When a combination of data is used, the order appears as follows: warning, caution, note. Such inserts in text are used to emphasize important and critical instructions. Explanation of usage is summarized as follows:

A. WARNING:

WARNING

Refers to a procedure or practice that, if not correctly followed, could result in injury, death, or long term health hazard of personnel.

B. CAUTION:

CAUTION

Refers to a procedure or practice that, if not followed correctly, could result in damage to or destruction of equipment.

C. NOTE:

NOTE
Refers to a procedure or condition that requires emphasis.

12. WARNINGS AND CAUTIONS APPLICABLE TO HAZARDOUS MATERIALS.

Warnings and cautions for hazardous materials listed in this manual are designed to inform personnel of hazards associated with such materials. Additional information related to hazardous materials is provided in material safety data sheets (MSDS) and during safety and health training. Personnel protective equipment, if required, should be included during training courses. Consult the site safety and health staff concerning specific personnel protective equipment requirements and appropriate handling of emergency procedures.

13. HOW TO USE THIS MANUAL.

A. Locate the applicable work package by one of the following methods:

(1) Refer to the Table of Contents in work package 001 00 for the operating procedure and corresponding work package number.

(2) Refer to the site plan drawings in work package 001 01. Find the work package number for the applicable equipment. Refer to Table 1 in 001 01 for the work package number and title.

B. Refer to the applicable work package. Perform the procedure as required by the electrical supervisor or electrical switching order (ESO).

C. Each user shall be responsible for maintaining and updating the manual. Refer to the Revision Log on Page C to determine the latest manual change/revision number and date. Prompt insertion of manual updates will result in a complete and up-to-date manual. Destroy all superseded and updated manual pages. The numerical index of effective work package pages on Page A lists the current changes to each work package/page.

D. Errors or areas requiring improved procedures should be submitted to Process Engineering. Use the SPR change recommendation form as shown in Appendix G. Your conscientious effort will materially aid in making this manual more useful.

14. MANUAL UPDATES.

A. A change to this manual will be prepared by Process Engineering when authorized by an approved engineering change. Process Engineering is responsible for issuing all changes to this manual. Site managers are responsible for notifying Process Engineering of all field changes. Changes to this manual will be prepared by Process Engineering on a timely basis. Each changed work package is inserted in the manual as required. Superseded work packages are then destroyed. Document Control is responsible for distribution and control of all changes to this manual.

B. If 60% or more of the work packages are affected by changes, then the entire manual will be revised. The revision incorporates all changed or added material and deletes material no longer applicable to the subject of the work package or manual. Document Control is responsible for distribution and control of all revisions to this manual.

APPENDIX A

RECORD OF APPLICABLE TECHNICAL DIRECTIVES

Type/No.	Date	Title and ECP No.	Date Inc.	Remarks

APPENDIX B

ABBREVIATIONS AND TERMS
(Sheet 1 of 2)

ABBREVIATIONS	TERMS
A, AMP	Ampere
AC	Alternating Current
ATS	Automatic Transfer Switch
BLDG	Building
C	Centigrade
CAV	Cavern
CL	Closed
COMS	Crude Oil Meter System
COPS	Conduct Of Operations
CRO	Control Room Operator
CS	Circuit Switcher
DC	Direct Current
DCS	Distributed Control System
DM	DynMcDermott
DOE	Department of Energy
ECN	Engineering Change Notice
ECP	Engineering Change Proposal
ELN	Equipment Location Number
ESD	Emergency Shutdown
ESO	Electrical Switching Order
F	Fahrenheit
FA	Forced Air Cooled
FIB	Field Instrument Building
FO	Forced Oil Cooled
FOA	Forced Oil Air Cooled
GSU	Gulf States Utilities
HI	High
HOA	Hand-Off-Automatic
HP	Horsepower
HZ	Hertz
Inc.	Incorporated
JSA	Job Safety Analysis
KV	Kilovolt
KVA	Kilovolt Ampere
KW	Kilowatt
LBDS	Load Break Disconnect Switch
LO	Low
LP&L	Louisiana Power & Light
MCC	Motor Control Center
Mech	Mechanical
MOA	Manual-Off-Automatic Switch
MRC	Maintenance Requirement Card
MSDS	Material Safety Data Sheet

APPENDIX B

ABBREVIATIONS AND TERMS
(Sheet 2)

ABBREVIATIONS	TERMS
MVA	Megavolt Ampere
N	No
N.O.	Normally Open
NEMA	National Electrical Manufacturers Association
No.	Number
OA	Oil Plus Air cooled
OCB	Oil Circuit Breaker
OMDG	Operations Manual Development Group
OP	Open
OSHA	Occupational Safety and Health Administration
P&ID	Piping and Instrumentation Diagram
PB	Pushbutton
PDP	Power Distribution Panel
psi	Pounds Per Square Inch
psig	Pounds Per Square Inch Gauge
QC	Quality Control
RDU	Remote Distribution Unit
RM	Room
RP	Relay Panel
RWIS	Raw Water Intake Structure
SG	Switchgear
SJ	Saint James
SOC	Security Operations Center
SPDP	Security Power Distribution Panel
SPR	Strategic Petroleum Reserve
SYNC	Synchronization
TEMP	Temperature
UPS	Uninterruptible Power Supply
US	United States
V	Volt
VAC	Volts Alternating Current
VDC	Volts Direct Current
W	Watt
WP	Work Package
Y	Yes
&	And
@	At
o	Degree
-	Minus
#	Number
%	Percent
+	Plus

APPENDIX C

ELECTRICAL SYMBOLS

OCB 4009	OIL CIRCUIT BREAKER
OCB 4001	OIL CIRCUIT BREAKER
	DISCONNECT SWITCH
CIR SW	CIRCUIT SWITCHER
	TRANSFORMER
	BUS
80KW	GENERATOR
700A	CIRCUIT BREAKER
52	AIR CIRCUIT BREAKER
IL	KEY INTERLOCK
A B	LOOP TRANSFORMER SWITCH
	5KV MOTOR STARTER
	DELTA WYE WIRING
R	GROUNDING RESISTOR
N.O.	NORMALLY OPEN
N.C.	NORMALLY CLOSED
21	DISTANCE RELAY
27	UNDERVOLTAGE RELAY
49	TEMPERATURE RELAY
50	INSTANTANEOUS OVERCURRENT RELAY
50/51	INSTANTANEOUS AND TIMED OVERCURRENT RELAY
51	TIME OVERCURRENT RELAY
51G	GROUND OVERCURRENT RELAY
67	DIRECTIONAL OVERCURRENT RELAY
86	LOCKOUT RELAY
87	DIFFERENTIAL RELAY
139	MULTILIN RELAY
AM	AMMETER
HM	HOUR METER
PFM	POWER FACTOR METER
WM	WATTMETER
VM	VOLTMETER
AS	AMMETER SWITCH
VS	VOLTMETER SWITCH
	LIGHT
LOR	LOCAL-OFF-REMOTE SWITCH
CS	CONTROL SWITCH

APPENDIX D

SPECIAL TOOLS AND SAFETY EQUIPMENT

PART NUMBER DESIGNATION	NOMENCLATURE
A-A-1974	OSHA Approved Portable Flashlight
A-A-1110	Safety Goggles
ASTM D120-87E1	Safety Gloves
A-A-2375	Face Shield
	Protective Body Gown
ASTM D120-87E1	Insulating Gloves
ASI/ASTM D178	Insulating Floor Mat
	Safety Shoes
	Hard Hat
	Portable Voltmeter
A-A-53127	Ear Plugs
	Multiple Lockout Device
	Padlocks

APPENDIX E

CONSUMABLE MATERIALS

REFERENCE NUMBER	TITLE
Roll of 2500	Danger-Do-Not-Operate Tag

APPENDIX F

REFERENCE MATERIALS

REFERENCE NUMBER	TITLE
SJ-E-302-52 thru -67	One-Line Diagrams, Saint James
SJ-OP-930-001	Site Operations Manual, Saint James Site, Mechanical Equipment
SJ-M-910-001	Saint James, Louisiana, Systems Description Manual
DOE/ID-10600	Electrical Safety Guidelines
ASI5480.22 (D506-02556-09)	Accident Prevention Manual
Section 12	Electrical Safety Related Work Practices
Section 27	Lockout/Tagout Procedure (Control of Hazardous Energy)
ASI-4330.12 (D506-01933-09)	Safe Work Permits
ASR4330.5 (22OP-17)	Interim Repair/Mitigation Authorization Procedure
Code of Federal Regulations, Title 29, Part 1910.95	Occupational Safety and Health Administration - Occupational Noise Exposure
DOE Order 5480.19 for SPR Facilities	Conduct of Operations Requirements
ASI5600.1 (D506-01082-09)	Security Operations Manual
ASI5700.17	Operations and Maintenance Quality Control Manual
DOE-STD-1029-92	DOE Standard Writer's Guide for Technical Procedures
MIL-M-81927B	General Style and Format of Technical Manuals

APPENDIX G

SPR CHANGE RECOMMENDATION FORM

SPR

CHANGE RECOMMENDATION

TO BE FILLED IN BY ORIGINATOR AND FORWARDED TO OMDG MANAGER

FROM(Originator)	SITE	DATE
TO (OMDG Manager)	SITE	

COMPLETE NAME OF MANUAL	REV. DATE	CHANGE DATE	WORK PKG.	PAGE	PARAGRAPH

RECOMMENDATION (Be specific)

☐ CHECK IF CONTINUED ON BACK

JUSTIFICATION

SIGNATURE	MAIL STOP	TITLE

ADDRESS OF SITE

TO BE FILLED IN BY OMDG MANAGER (Return to Originator)

FROM	DATE
TO	

REFERENCE
YOUR CHANGE RECOMMENDATION DATED _____

☐ YOUR CHANGE RECOMMENDATION DATED _____ IS ACKNOWLEDGED. IT WILL BE HELD FOR ACTION OF THE REVIEW CONFERENCE PLANNED FOR _____ TO BE HELD AT _____

OMDG MANAGER	**SITE**

APPENDIX H

ELECTRICAL SWITCHING ORDER

ELECTRICAL SWITCHING ORDER (ESO) REQUEST FORM:

Before any electrical switching may be initiated on MCC's or major equipment powered over 480 volts, this electrical switching order must be completed. Switching shall be performed in the sequence listed and done in accordance with the Electrical Operations Manual approved procedures.

The control room operator shall be notified before starting any electrical switching.

SPR Site: _____

Reason for requested electrical switching:

_____

_____

_____

Work Order No.: _____ Contract No.: _____

Service Order No.: _____ CMCR No.: _____

Switching shall begin - Date: _____ Time: _____

Switching shall terminate - Date: _____ Time: _____

Expected duration of shutdown (if de-energizing): _____

Completed by Electrical Supervisor: Description of Equipment & Procedure Used

STEP	EQUIPMENT SWITCHED	AREA EFFECTED	EQUIPMENT	PROCEDURES
____	_____	_____	_____	_____
____	_____	_____	_____	_____
____	_____	_____	_____	_____
____	_____	_____	_____	_____

Additional steps may be added to an attached sheet (Include all motors, MOV's, instrumentation, fire system, PPS, lighting and other areas effected).
* Identify the specific equipment in each step (e.g., 480V MCC-1).

Initiator: _____ Date: _____ Time: _____

Electrician Assigned: _____

	APPROVALS	COMMENTS
Electrical Supv.:	_____	_____
Operations Supv.:	_____	_____

Approved: _____, Site Maint. Mgr. Date: _____

/ / Upon completion of work, the electrical equipment will be returned to original configuration by performing switching operation in reverse order.

Special Notes: _____

_____

POWER DISTRIBUTION SYSTEM - DESCRIPTION

SAINT JAMES SITE

ELECTRICAL OPERATIONS

ELECTRICAL OPERATIONS

SAINT JAMES SITE

SYSTEM DESCRIPTION

List of Effective Work Package Pages

Page Number	Revision Number	Page Number	Revision Number
1/(2 Blank)	1		

Record of Applicable Technical Directives

None

NOTE

This work package has been voided. Refer to work package 003 01.

POWER DISTRIBUTION SYSTEM - DESCRIPTION

SAINT JAMES SITE

ELECTRICAL OPERATIONS

ELECTRICAL OPERATIONS

SAINT JAMES SITE

SYSTEM DESCRIPTION

List of Effective Work Package Pages

Page Number	Revision Number	Page Number	Revision Number
1 thru 7/(8 Blank)	1		

Record of Applicable Technical Directives

None

TABLE OF CONTENTS

Para.	Title	Page
1.	INTRODUCTION	3
2.	5KV SWITCHGEAR BUS NO. 1	4
2.1	Fire Water Pump Transformer TX-FW	4
2.2	5KV Motor Control Center MCC-A	4
2.2.1	480V Motor Control Center MCC-1A	4
2.2.2	480V Motor Control Center MCC-3	4
2.2.3	480V Motor Control Center MCC-4	5
2.3	5KV Motor Control Center MCC-B	5
2.3.1	480V Motor Control Center MCC-1B	5
2.3.1.1	480V Motor Control Center MCC-2	5
2.3.1.1A	480V Motor Control Center MCC-3E	5
2.3.1.1B	480V Motor Control Center MCC-4E	5
2.3.1.1C	480V Motor Control Center MCC-5E	6
2.3.2	480V Motor Control Center MCC-5	6
2.3.3	480V Motor Control Center MCC-5A	6
2.3.4	480V Motor Control Center MCC-6	6
3.	DOCK NO. 1 AREA	6
3.1	Dock No. 1 Switchgear	6
3.1.1	480V Motor Control Center MCC-D1	6
4.	DOCK NO. 2 AREA	7
4.1	480V Motor Control Center MCC-D2	7

1. INTRODUCTION.

The Saint James terminal receives power from the Louisiana Power and Light (LP&L) substation located west of administration building 704. The LP&L owned and operated substation utilizes one main transformer which provides power for the 5KV switchgear at the main site. The main transformer is connected to a low resistance grounding system. The 5KV switchgear is comprised of one bus lineup (bus no. 1) located in building 722. There are three classes of voltage used at Saint James:

A. The 5KV class consists of two 5KV switchgear and two 5KV motor control centers. 5KV switchgear bus no. 1 is used to feed fire water pump transformer TX-FW and 4160V motor control centers MCC-A and MCC-B. 5KV switchgear dock no. 1 is used to feed fire water pumps SJTP-1 and SJTP-2 and 480V motor control center MCC-D1. MCC-A and MCC-B serve motors rated above 300HP which are fed from full voltage, non-reversing starters with removable cartridge fuses and associated protective relaying. MCC-A and MCC-B serve 4160-480V step-down transformers which are fed from mechanically-latched 5KV contactors with removable cartridge fuses and associated protective relaying.

B. The 600V class consists of thirteen 480V motor control centers, three emergency generator SJEG-10, LPG-1 (dock no. 1), and LPG-2 (dock no. 2) and three automatic transfer switches SJATS-1, SJATS-2 (dock no. 1), and SJATS-3 (dock no. 2). The 480V motor control centers provide power to three phase motors rated below 300HP, motor operated valves, and 480-120/208V transformers. The motor control centers contain circuit breakers, combination motor starters, switches, fuses, control stations, and indicating lights.

C. The 208V class consists of 208/120V distribution panels and uninterruptible power supply UPS-1. UPS-1 is used to provide 120V single-phase power to the Distributed Control System (DCS) and other critical loads. UPS-1 is located in the motor control center room of building 704.

The Saint James electrical system is shown schematically in one-line diagrams. Drawing SJ-E-302-018, Block Diagram Power Distribution is an overall one-line diagram of the system and references all other one-line diagrams. For a complete listing of electrical loads, refer to work package 004 01.

2. **5KV SWITCHGEAR BUS NO. 1.**

The 5KV switchgear bus no. 1 is comprised of air circuit breakers with protective relaying. Bus no. 1 feeds the following loads:

2.1 **Fire Water Pump Transformer TX-FW.** A feeder breaker at the 5KV switchgear is provided to isolate fire water pump SJTP-24 and transformer TX-FW located at the fire pump house building 716.

2.2 **5KV Motor Control Center MCC-A.** MCC-A is a 5KV motor control center and is located in the motor control center room of building 704. MCC-A feeds 480V MCC-1A via step-down transformer TX-1, 480V MCC-3 via step-down transformer TX-3, 480V MCC-4 via step-down transformer TX-4, and various 4160V pumps.

2.2.1 **480V Motor Control Center MCC-1A.** MCC-1A is a 480V motor control center and is located in the motor control center room of building 704. A normally open bus-tie breaker is located between MCC-1A and MCC-1B.

The MCC-1A main breaker is equipped with a kirk key interlock system which prevents the MCC-1A main breaker, the MCC-1B main breaker, and the MCC-1A/1B bus-tie breaker from being closed, simultaneously. Only one main breaker may be closed while the bus-tie breaker is closed.

The MCC-1A main breaker is equipped with a shunt trip which trips the MCC-1A main breaker if the MCC-1A/1B bus-tie breaker is closed, the emergency generator is running, and the automatic transfer switch transfers to emergency power. The MCC-1A bus will remain energized.

MCC-1A provides 480V power to various 480V loads.

2.2.2 **480V Motor Control Center MCC-3.** MCC-3 is a 480V motor control center and is located south of the water treatment area. MCC-3 provides 480V power to motor operated valves, a lighting panel, and floodlights.

2.2.3 **480V Motor Control Center MCC-4.** MCC-4 is a 480V motor control center and is located south of the metering station. MCC-4 provides 480V power to 480V pumps, motor operated valves, a lighting panel, floodlights, streetlights, and a cathodic protection rectifier.

2.3 **5KV Motor Control Center MCC-B.** MCC-B is a 5KV motor control center and is located in the motor control center room of building 704. MCC-B feeds 480V MCC-1B via step-down transformer TX-2, 480V MCC-5 and MCC-5A via step-down transformer TX-5, 480V MCC-6 via step-down transformer TX-6, and various 4160V pumps.

2.3.1 **480V Motor Control Center MCC-1B.** MCC-1B is a 480V motor control center and is located in the motor control center room of building 704. MCC-1B is fed through automatic transfer switch SJATS-1. The transfer switch receives normal power from MCC-B through step-down transformer TX-2 and emergency power from the emergency generator SJEG-10. Loss of normal power causes the transfer switch to start the emergency generator and transfer MCC-1B to emergency power. A normally open bus-tie breaker is located between MCC-1A and MCC-1B.

The MCC-1B main breaker is equipped with a kirk key interlock system which prevents the MCC-1A main breaker, the MCC-1B main breaker, and the MCC-1A/1B bus-tie breaker from being closed, simultaneously. Only one main breaker may be closed while the bus-tie breaker is closed.

MCC-1B provides 480V power to 480V MCC-2 and various 480V loads.

2.3.1.1 **480V Motor Control Center MCC-2.** MCC-2 is a 480V motor control center and is located in the motor control center room of building 704. MCC-2 provides 480V power to 480V MCC-3E, 480V MCC-4E, 480V MCC-5E, the uninteruptible power supply, motor operated valves, control building emergency power, and the maintenance building emergency power.

A. **480V Motor Control Center MCC-3E.** MCC-3E is a 480V motor control center and is located south of the water treatment area. MCC-3E provides 480V power to critical 480V loads.

B. **480V Motor Control Center MCC-4E.** MCC-4E is a 480V motor control center and is located south of the metering station. MCC-4E provides 480V power to critical 480V loads.

C. **480V Motor Control Center MCC-5E.** MCC-5E is a 480V motor control center and is located west of permanent facility building no. 702. MCC-5E provides 480V power to critical 480V loads.

2.3.2 **480V Motor Control Center MCC-5.** MCC-5 is a 480V motor control center and is located west of permanent facility building no. 702. MCC-5 provides 480V power to 480V pumps, a lighting panel, streetlights, and a cathodic protection rectifier.

2.3.3 **480V Motor Control Center MCC-5A.** MCC-5A is a 480V motor control center and is located west of the permanent facility building no. 702. MCC-5A provides 480V power to 480V pumps, the spare parts warehouse, and floodlights.

2.3.4 **480V Motor Control Center MCC-6.** MCC-6 is a 480V motor control center and is located west of tank T-1. MCC-6 provides 480V power to 480V pumps, a lighting panel, streetlights, and floodlights.

3. **DOCK NO. 1 AREA.**

Dock no. 1 receives power from the LP&L substation located across HWY-18 from dock no. 1. The LP&L substation provides power through three 34.5-4.16KV pole-mounted transformers at the substation. The transformers step down the power to 4160 volts, which is supplied to dock no. 1 switchgear. The dock no. 1 system includes one 4160V switchgear, one 480V motor control center, an emergency generator, and an automatic transfer switch.

3.1 **Dock No. 1 Switchgear.** Dock no. 1 switchgear is a 4160V switchgear and is located across HWY-18 from dock no. 1. Dock no. 1 switchgear provides 4160V power for 200 HP fire water pump SJTP-1 and 1000 HP fire water pump SJTP-3, and 480V power for 480V MCC-D1 via step-down transformer SJXFMR-7.

3.1.1 **480V Motor Control Center MCC-D1.** MCC-D1 is a 480V motor control center and is located at dock no. 1 in building no. 712. MCC-D1 provides 480V power to 480V loads at dock no. 1.

4. DOCK NO. 2 AREA.

Dock no. 2 receives power from the LP&L substation located across HWY-18 from dock no. 2. The LP&L substation provides power through three 34.5K-480/277V pole-mounted transformers at the substation. The transformers step down the power to 480 volts, which is supplied to 480V motor control center MCC-D2 at dock no. 2. The dock no. 2 system includes one 480V motor control center, an emergency generator, and an automatic transfer switch.

4.1 **480V Motor Control Center MCC-D2.** MCC-D2 is a 480V motor control center and is located at dock no. 2 in building no. 713. MCC-D2 provides 480V power to 480V loads at dock no. 2.

POWER DISTRIBUTION SYSTEM - SYSTEM DIAGRAM

SAINT JAMES SITE

ELECTRICAL OPERATIONS

ELECTRICAL OPERATIONS

SAINT JAMES SITE

SYSTEM DIAGRAM

List of Effective Work Package Pages

Page Number	Revision Number	Page Number	Revision Number
1/(2 Blank)	1		

Record of Applicable Technical Directives

None

NOTE

This work package has been voided. Refer to work package 004 01.

POWER DISTRIBUTION SYSTEM - SYSTEM DIAGRAM

SAINT JAMES SITE

ELECTRICAL OPERATIONS

ELECTRICAL OPERATIONS

SAINT JAMES SITE

SYSTEM DIAGRAM

List of Effective Work Package Pages

Page Number	Revision Number	Page Number	Revision Number
1 thru 14	2		

Record of Applicable Technical Directives

None

TABLE OF CONTENTS

Para.	Title	Page
1.	INTRODUCTION	3
1.1	Purpose	3
1.2	Scope	3
1.3	Applicability	3
2.	PRECAUTIONS AND LIMITATIONS	4
3.	PREREQUISITE ACTIONS	4
4.	RECORDS	4
Appendix A	Electrical System Block Diagram	5
Appendix B	Electrical Load List	6
Appendix C	Pump Motor List	13

1. INTRODUCTION.

This work package contains various electrical reference diagrams and data.

Appendix A contains the Saint James electrical system block diagram. The block diagram shows an overview of the electrical system and includes the work package number associated with each piece of distribution equipment.

Appendix B lists the electrical loads supplied by each motor control center or switchgear bus on the site. Electrical loads supplied by a specific bus are duplicated in the appendix of the respective work package.

Appendix C is a pump motor list. Motor description, power source, and horsepower are presented.

1.1 **Purpose.** The primary purpose of the electrical system block diagram is to identify the work package that covers a particular motor control center or switchgear. The diagram also serves as a Saint James electrical distribution system overview. The diagram is not intended to replace the electrical one-line diagrams for the site.

The purpose of the electrical load list is to identify all major loads associated with the various motor control centers and switchgear. These data is necessary when planning an electrical switching operation.

1.2 **Scope.** The electrical system block diagram in Appendix A gives a simplified overview of the electrical distribution system. Included are electrical switchgear and motor control centers shown from the incoming 34.5KV service down to 480V motor control centers. Small 120/240V distribution panels are not included. Information given in the block diagram is limited to that necessary to present a basic overview of the system and to that needed to identify work packages herein. More detailed drawings are in each work package, the electrical one-lines, and specific schematic or wiring diagrams.

The electrical load list in Appendix B tabulates all major loads associated with each switchgear and motor control center. These are primarily 4160V and 480V loads. It does not identify specific loads tied to 120/240V distribution panels.

1.3 **Applicability.** The electrical block diagrams and electrical load list apply to the Saint James electrical distribution system only.

2. PRECAUTIONS AND LIMITATIONS.

The electrical system block diagrams are drawn to the same level of detail as the site electrical one-line diagrams from which they were derived. However, they do not include all of the same information and are not intended to replace the one-lines.

The electrical load list gives the primary loads attached to various buses. Other loads can be supplied by a bus and not be included in the list (e.g., small lighting and office loads). The list can be made inaccurate if loads are temporarily added or removed from a bus.

3. PREREQUISITE ACTIONS.

The Saint James electrical one-line diagrams should be readily available when using the electrical block diagram.

4. RECORDS.

The electrical load list should be included with each electrical switching order (ESO) to show specifically what loads will be affected. Changes to the list must be recorded.

APPENDIX A

ELECTRICAL SYSTEM BLOCK DIAGRAM

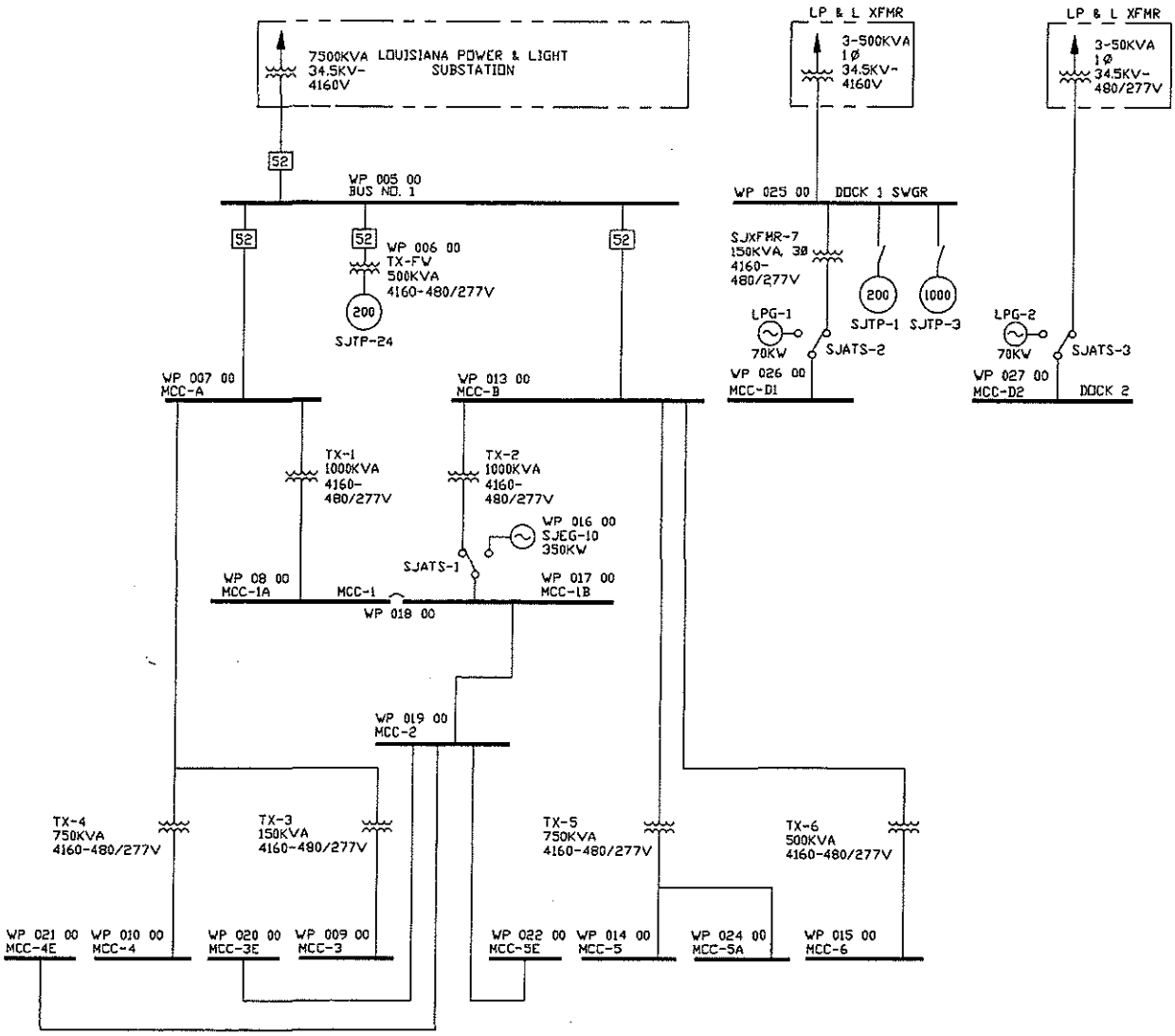

APPENDIX B

ELECTRICAL LOAD LIST
(Sheet 1 of 7)

5KV SWITCHGEAR BUS NO.1:

SJTP-24 Fire water pump via 500KVA transformer TX-FW.
Motor Control Center A (MCC-A):
- SJT-1 Booster pump.
- SJT-3 Booster pump.
- SJT-4 Booster pump.
- SJT-6 Accelerated fill pump.
- **Motor Control Center 1A (MCC-1A) via 1000KVA transformer TX-1:**
  - MCC-1A/1B bus-tie breaker.
  - DP-A Oil Q/A laboratory building distribution panel.
  - Control building.
  - Maintenance building.
  - MOV-2D-20-W1.
  - MOV-T520-2.
  - MOV-T520-3.
  - MOV-T620-4.
  - MOV-2D-20-F1.
  - MOV-T520-5.
  - MOV-T520-4.
  - Control Valve 1D-20-C.
  - Control Valve 2D-20-C.
  - MOV-120-D.
  - MOV-220-D.
  - MOV-320-D3.
  - MOV-T420-3.
  - Lift station no. 1.
  - LP-1 Lighting panel.
  - 15KVA transformer for LP-1.
  - SJTP-21 Retention pond no. 2 sump pump.
  - SJTP-22 Retention pond no. 2 sump pump.
  - MOV-120-S.
  - MOV-220-S.
  - MOV-320-S1.
  - MOV-320-S2.
  - MOV-T420-2.
  - MOV-T420-5.
  - MOV-T420-4.
  - MOV-T620-2.
  - MOV-T620-3.
  - MOV-T620-5.
  - MOV-1D-20-F1.
  - MOV-1D-20-W1.
  - MOV-1D-20-F2.
  - MOV-2D-20-F2.

APPENDIX B

ELECTRICAL LOAD LIST
(Sheet 2)

Motor Control Center 3 (MCC-3) via 150KVA transformer TX-3:

MOV-BC-20-R1.
MOV-WI-20-R1.
MOV-WI-20-R2.
MOV-BC-20-R2.
MOV-WI-20-T.
MOV-BC-20-T.
Floodlights.
MOV-CL20-9.
LP-3 Lighting panel.
15KVA transformer for LP-3.
MOV-K20-BC2.
MOV-K20-BC1.
MOV-K20-BC3.

Motor Control Center 4 (MCC-4) via 750KVA transformer TX-4:

SJTP-101 Stripper pump for tank T-1.
SJTP-102 Stripper pump for tank T-2.
Streetlights.
Meter area floodlights.
MOV-BC-20-W2.
MOV-BC-20-F2.
MOV-CL20-2.
MOV-CL20-5.
MOV-K20-3.
MOV-K20-4
SJTP-23 Fire water jockey pump, main site.
ELT-2 Fire water pump house.
Bladder tank floodlights.
MOV-CL20-3.
Control valve WI-120-C.
LP-4 Lighting panel.
15KVA transformer for LP-4 lighting panel.
MOV-BCM120-1.
MOV-BCM120-2.
MOV-BCM120-P1.
MOV-WP20-K.
MOV-BCM220-1.
MOV-BCM220-2.
MOV-BCM220-P1.
MOV-BCM320-1.
MOV-BCM320-2.
MOV-BCM320-P1.
SJTP-19 Retention pond no. 1 sump pump.
Control valve BCM120-C.
Control valve BCM220-C.

APPENDIX B

ELECTRICAL LOAD LIST
(Sheet 3)

Control valve BCM320-C.
SJTP-20 Retention pond no.1 sump pump.
MOV-BC-20-W3.
MOV-BC-20-F1.
MOV-WI-20-W1.
MOV-CL20-6.
MOV-WIM120-1.
MOV-WIM120-2.
MOV-WIM120-P1.
MOV-WP20-WI.
MOV-WIM220-1.
MOV-WIM220-2.
MOV-WIM220-P1.
MOV-WI-20-F2.
MOV-WIM320-1.
MOV-WIM320-P1.
MOV-WIM320-2.
MOV-WI-20-W2.
Control valve WIM120-C.
Control valve WIM220-C.
Control valve WIM320-C.
Control valve BC120-C.
MOV-WI-20-F1.
MOV-1720-D.
MOV-WI-20-F3.
MOV-1620-D.
MOV-1520-D.
MOV-1720-S.
MOV-1520-S.
MOV-1620-S.
Control valve WP20-C.
Temp pump floodlights.
SJT-110 Crude oil mixer for tank T-2.
SJT-111 Crude oil mixer for tank T-2.
SJT-112 Crude oil mixer for tank T-2.
SJT-107 Crude oil mixer for tank T-1.
SJT-108 Crude oil mixer for tank T-1.
SJT-109 Crude oil mixer for tank T-1.
Cathodic protection rectifier.

APPENDIX B

ELECTRICAL LOAD LIST
(Sheet 4)

Motor Control Center B (MCC-B):
SJT-7 Accelerated fill pump.
SJT-8 Accelerated fill pump.
SJT-5 Booster pump.
SJT-2 Booster pump.
Motor Control Center 1B (MCC-1B) via 1000KVA transformer TX-2:
MCC-1A/1B bus-tie breaker.
MOV-320-D1.
MOV-320-D2.
MOV-420-D2.
Floodlights.
Streetlights.
SJT-20 Drain oil sump pump for tank T-8.
MOV-T320-2.
MOV-T220-3.
MOV-T320-5.
Control valve 420-D1-C.
Control valve 520-D1-C.
MOV-T120-4.
MOV-K20-7.
MOV-T120-5.
MOV-T120-2.
MOV-CL20-1.
MOV-CL20-8.
MOV-WI-20-W3.
MOV-K20-6.
SJT-113 Crude oil tank mixer for tank T-3.
SJT-114 Crude oil tank mixer for tank T-3.
SJT-115 Crude oil tank mixer for tank T-4.
SJT-116 Crude oil tank mixer for tank T-4.
Cathodic protection.
MOV-K20-2.
MOV-K20-1.
MOV-BC-20-W1.
MOV-K20-8.
MOV-K20-9.
MOV-T220-4.
MOV-T220-5.
MOV-T120-3.
MOV-T220-2.
SJTP-103 Stripper pump for tank T-3.
MOV-T320-3.
MOV-T320-4.
SJTP-104 Stripper pump for tank T-4.

APPENDIX B

ELECTRICAL LOAD LIST
(Sheet 5)

MOV-420-S1.
MOV-420-S2.
MOV-520-S1.
MOV-520-S2.
Motor Control Center 2 (MCC-2):
- EPP-1 Power panel.
- 5KVA transformer at emergency generator SJEG-10.
- Control building emergency power.
- Maintenance building emergency power.
- Uninterruptible power supply.
- MOV-T320-1.
- MOV-T420-1.
- **Motor Control Center 3E (MCC-3E):**
  - MOV-BC-20-E.
  - MOV-WI-20-B.
  - Radio antenna tower.
  - SJT-22 Slop oil sump pump for tank T-10.
- **Motor Control Center 4E (MCC-4E):**
  - MOV-T120-1.
  - MOV-T220-1.
  - SJT-19 Drain oil sump pump for tank T-7.
- **Motor Control Center 5E (MCC-5E):**
  - Sewage treatment plant no. 2.
  - Lift station no. 2.
  - Permanent facility.
  - LP-5 Lighting panel via 15KVA transformer LT-5.
  - MOV-T520-1.
  - MOV-T620-1.
  - Security Operations Center (SOC).
  - Guardhouse.
  - Streetlights.
  - Cantilever barrier no. 1.
  - Cantilever barrier no. 2.

Motor Control Center 5 (MCC-5) via 750KVA transformer TX-5:
- SJTP-105 Stripper pump for tank T-5.
- Streetlights (North).
- SJTP-106 Stripper pump for tank T-6.
- Cathodic protection rectifier.
- Streetlights (East).
- SJT-119 Crude oil mixer for tank T-5.
- SJT-118 Crude oil mixer for tank T-5.
- SJT-121 Crude oil mixer for tank T-6.
- SJT-122 Crude oil mixer for tank T-6.

Motor Control Center 5A (MCC-5A) via 750KVA transformer TX-5:
- SJT-117 Crude oil mixer for tank T-5.

APPENDIX B

ELECTRICAL LOAD LIST
(Sheet 6)

SJT-120 Crude oil mixer for tank T-6.
Spare parts warehouse.
Floodlights.

Motor Control Center 6 (MCC-6) via 500KVA transformer TX-6:

Streetlights.
SJTP-18A Effluent sump pump for waste water treatment.
SJTP-18B Effluent sump pump for waste water treatment.
SJTP-18C Effluent sump pump for waste water treatment.
SJTP-17A Skimmer pump for waste water treatment.
SJTP-17B Skimmer pump for waste water treatment.
Floodlights.
LP-6 Lighting panel.
15KVA transformer for LP-6 lighting panel.
SJTP-15A Oily water lift station pump.
SJTP-15B Oily water lift station pump.
SJTP-15C Oily water lift station pump.
SJTP-16A Oil sump pump.
SJTP-16B Oil sump pump.

5KV SWITCHGEAR DOCK NO. 1:

SJTP-1 Dock no. 1 fire water pump no. 1.
SJTP-3 Dock no. 1 fire water pump no. 3.

Motor Control Center D1 (MCC-D1) via 150KVA transformer SJXFMR-7:

SJTP-5 Fire water jockey pump.
SJTP-10 Slop oil pump.
SJTP-11 Purge pump.
BD-1 Breasting dolphin.
BD-2 Breasting dolphin.
MD-1 Mooring dolphin.
MD-2 Mooring dolphin.
BD-3 Breasting dolphin.
BD-4 Breasting dolphin.
MD-3 Mooring dolphin.
MD-4 Mooring dolphin.
Roadway, dock, and walkway lights.
MOV-101.
MOV-102.
MOV-103.
MOV-104.
MOV-105.
MOV-106.
Cranes hydraulic package.
Load arms hydraulic package.
Cathodic protection rectifier no. 2.
Cathodic protection rectifier no. 1.

APPENDIX B

ELECTRICAL LOAD LIST
(Sheet 7)

15KVA transformer for LP-1 control room lighting panel.
15KVA transformer for LP-6 fire water platform building lighting panel.
15KVA transformer for LP-5 fire water pump area lighting panel.
7.5KVA transformer (spare).

Additional loads via 150KVA transformer SJXFMR-7:

5KVA transformer for LP-3 substation lighting panel.
Pressurizing fan.
15KVA transformer for LP-F1 fire protection power panel.
Heating and air conditioning unit.

Motor Control Center D2 (MCC-D2) via 3-50KVA LP&L transformers:

SJTP-12 Slop oil pump.
SJTP-13 Purge pump.
15KVA transformer for LP-2 control room lighting panel.
MD-5 Mooring dolphin.
MD-6 Mooring dolphin.
BD-5 Breasting dolphin.
BD-6 Breasting dolphin.
MD-7 Mooring dolphin.
MD-8 Mooring dolphin.
BD-7 Breasting dolphin.
BD-8 Breasting dolphin.
Roadway, dock, and walkway lights.
MOV-201.
MOV-202.
MOV-203.
MOV-204.
MOV-205.
MOV-206.
Cranes hydraulic package.
Load arms hydraulic package.
Cathodic protection rectifier no. 1.
Cathodic protection rectifier no. 2.
7.5KVA transformer (spare).

Additional loads via 3-50KVA LP&L transformer:

5KVA transformer for LP-4 substation lighting panel.
Pressurizing fan.
15KVA transformer for LP-F2 fire protection power panel.
3KVA transformer for heating and air conditioning unit.

APPENDIX C

PUMP MOTOR LIST
(Sheet 1 of 2)

MOTOR	DESCRIPTION	POWER SOURCE	HP
SJT-1	Booster pump	MCC-A	1500
SJT-2	Booster pump	MCC-B	1500
SJT-3	Booster pump	MCC-A	1500
SJT-4	Booster pump	MCC-A	1500
SJT-5	Booster pump	MCC-B	1500
SJT-6	Accelerated fill pump	MCC-A	1375
SJT-7	Accelerated fill pump	MCC-B	1375
SJT-8	Accelerated fill pump	MCC-B	1375
SJT-19	Drain oil sump pump for tank T-7	MCC-4E	15
SJT-20	Drain oil sump pump for tank T-8	MCC-1B	15
SJT-22	Slop oil sump pump for tank T-10	MCC-3E	10
SJT-107	Crude oil mixer for tank T-1	MCC-4	75
SJT-108	Crude oil mixer for tank T-1	MCC-4	75
SJT-109	Crude oil mixer for tank T-1	MCC-4	75
SJT-110	Crude oil mixer for tank T-2	MCC-4	75
SJT-111	Crude oil mixer for tank T-2	MCC-4	75
SJT-112	Crude oil mixer for tank T-2	MCC-4	75
SJT-113	Crude oil mixer for tank T-3	MCC-1B	50
SJT-114	Crude oil mixer for tank T-3	MCC-1B	50
SJT-115	Crude oil mixer for tank T-4	MCC-1B	50
SJT-116	Crude oil mixer for tank T-4	MCC-1B	50
SJT-117	Crude oil mixer for tank T-5	MCC-5A	75
SJT-118	Crude oil mixer for tank T-5	MCC-5	75
SJT-119	Crude oil mixer for tank T-5	MCC-5	75
SJT-120	Crude oil mixer for tank T-6	MCC-5A	75
SJT-121	Crude oil mixer for tank T-6	MCC-5	75
SJT-122	Crude oil mixer for tank T-6	MCC-5	75
SJTP-1	Dock no. 1 fire water pump no. 1	SWGR DOCK 1	200
SJTP-3	Dock no. 1 fire water pump no. 3	SWGR DOCK 1	1000
SJTP-5	Fire water jockey pump, dock no. 1	MCC-D1	15
SJTP-10	Slop oil pump, dock no. 1	MCC-D1	7.5
SJTP-11	Purge pump, dock no. 1	MCC-D1	25
SJTP-12	Slop oil pump, dock no. 2	MCC-D2	7.5
SJTP-13	Purge pump, dock no. 2	MCC-D2	25
SJTP-15A	Oily water lift station pump	MCC-6	25
SJTP-15B	Oily water lift station pump	MCC-6	25
SJTP-15C	Oily water lift station pump	MCC-6	25
SJTP-16A	Oil sump pump	MCC-6	15
SJTP-16B	Oil sump pump	MCC-6	15
SJTP-17A	Skimmer pump	MCC-6	7.5
SJTP-17B	Skimmer pump	MCC-6	7.5
SJTP-18A	Effluent sump pump	MCC-6	50

APPENDIX C

PUMP MOTOR LIST
(Sheet 2)

MOTOR	DESCRIPTION	POWER SOURCE	HP
SJTP-18B	Effluent sump pump	MCC-6	50
SJTP-18C	Effluent sump pump	MCC-6	50
SJTP-19	Retention pond no. 1 sump pump	MCC-4	5
SJTP-20	Retention pond no. 1 sump pump	MCC-4	5
SJTP-21	Retention pond no. 2 sump pump	MCC-1A	3
SJTP-22	Retention pond no. 2 sump pump	MCC-1A	3
SJTP-23	Fire water jockey pump, main site	MCC-4	15
SJTP-24	Fire water pump, main site	TX-FW	200
SJTP-101	Stripper pump for tank T-1	MCC-4	25
SJTP-102	Stripper pump for tank T-2	MCC-4	25
SJTP-103	Stripper pump for tank T-3	MCC-1B	25
SJTP-104	Stripper pump for tank T-4	MCC-1B	25
SJTP-105	Stripper pump for tank T-5	MCC-5	25
SJTP-106	Stripper pump for tank T-6	MCC-5	25

NORMAL OPERATING PROCEDURE

SAINT JAMES SITE

5KV SWITCHGEAR BUS NO. 1

NORMAL OPERATING PROCEDURE

SAINT JAMES SITE

5KV SWITCHGEAR BUS NO. 1

List of Effective Work Package Pages

Page Number	Revision Number	Page Number	Revision Number
1/(2 Blank)	1		

Record of Applicable Technical Directives

None

NOTE

This work package has been voided. Refer to work package 005 01.

NORMAL OPERATING PROCEDURE

SAINT JAMES SITE

5KV SWITCHGEAR BUS NO. 1

NORMAL OPERATING PROCEDURE

SAINT JAMES SITE

5KV SWITCHGEAR BUS NO. 1

List of Effective Work Package Pages

Page Number	Revision Number	Page Number	Revision Number
1 thru 23/(24 Blank)	2		

Record of Applicable Technical Directives

None

TABLE OF CONTENTS

Para.	Title	Page
1.	INTRODUCTION	3
1.1	Purpose	3
1.2	Scope	3
1.3	Applicability	3
1.4	Reference Documents	3
2.	PRECAUTIONS AND LIMITATIONS	4
3.	PREREQUISITE ACTIONS	4
4.	NORMAL STARTUP OPERATION OF 5KV SWITCHGEAR BUS NO. 1	5
4.1	Startup Preparations	5
4.2	Switching Operations	6
4.3	Monitoring	7
5.	NORMAL SHUTDOWN OPERATION OF 5KV SWITCHGEAR BUS NO. 1	8
5.1	Shutdown Preparations	8
5.2	Switching Operations	9
5.3	Verification	9
6.	ISOLATION PROCEDURE OF 5KV SWITCHGEAR BUS NO. 1	10
6.1	Coordination of Operations	10
6.2	Switching Operations	10
6.3	Securing the Equipment	12
7.	AUTOMATIC SHUTDOWN OF 5KV SWITCHGEAR BUS NO. 1	12
7.1	Shutdown Investigation	13
7.2	Switching and Isolation Operations	14
8.	RECORDS	14
Appendix A	One-Line Diagram	15
Appendix B	Elevations	16
Appendix C	Electrical Loads	18

1. INTRODUCTION.

5KV switchgear bus no. 1 is located in building No. 722 east of the LP&L main substation. 5KV switchgear bus no. 1 is fed from the LP&L owned and operated main transformer. The main transformer is connected to a low resistance grounding system.

5KV switchgear bus no. 1 is rated 2000A at 4160V, three-phase, and is protected by a 2000-ampere main breaker. The 5KV switchgear bus no. 1 lineup includes the following loads:

A. Feeder breaker for fire water pump transformer TX-FW.

B. Feeder breaker for motor control center A (MCC-A).

C. Feeder breaker for motor control center B (MCC-B).

See Appendixes A, B, and C.

The control power bus is rated at 240VAC and feeds monitoring and control equipment for 5KV switchgear bus no. 1 circuit breakers. A 4160-120/240V control power transformer (CPT) is connected to the line side of the main breaker.

1.1 **Purpose.** This procedure provides step-by-step operations which shall be performed to safely and efficiently operate 5KV switchgear bus no. 1.

1.2 **Scope.** This procedure provides directions to an authorized electrician for the performance of the following activities under normal conditions:

A. Start up 5KV switchgear bus no. 1.

B. Shut down 5KV switchgear bus no. 1.

C. Isolate 5KV switchgear bus no. 1.

D. Investigate an automatic shutdown of 5KV switchgear bus no. 1.

1.3 **Applicability.** The activities described in this procedure shall be performed by an authorized electrician at the request of the supervisor.

1.4 **Reference Documents.**

A. Block Diagram Power Distribution, drawing SJ-E-302-018.

B. One-Line Diagram Substation & 5KV Switchgear, drawing SJ-E-302-055.

C. Work package 006 00, Fire Water Pump Transformer TX-FW.

D. Work package 007 00, 5KV Motor Control Center MCC-A.

E. Work package 013 01, 5KV Motor Control Center MCC-B.

2. PRECAUTIONS AND LIMITATIONS.

The following precautions and limitations apply to the operation of 5KV switchgear bus no. 1:

A. All nonessential personnel shall maintain a minimum distance of 10 feet from the switchgear when power is first applied, until startup is complete.

B. Use of insulating gloves, protective body gowns, hooded face shields, and insulating floor mats is required during 5KV racking and switching operations.

C. A safety watch shall be stationed within view of the electrician performing 5KV switching operations.

D. The power source for 5KV switchgear bus no. 1 is the LP&L transformer. The nominal phase-to-phase voltage from the LP&L transformer is 4160 volts (4000 volts minimum).

3. PREREQUISITE ACTIONS.

The following prerequisite actions shall be accomplished prior to operation of 5KV switchgear bus no. 1:

A. Review the job safety analysis (JSA), if applicable, on this equipment for potential safety hazards.

B. Review associated one-line diagrams with the supervisor.

C. The supervisor shall verify routine preventive maintenance has been performed on 5KV switchgear bus no. 1 and its components as described in the applicable maintenance requirement card (MRC).

D. The operations shift supervisor shall ensure all clearance orders (Safe Work Permits) associated with 5KV switchgear bus no. 1 have been issued.

E. Visually inspect 5KV switchgear bus no. 1 for any signs of damage or abnormal conditions. Report same to the supervisor.

F. Visually check for any temporary wiring, grounds, locks, or tags. All findings shall be reported to the control room operator and the supervisor.

G. Site operations personnel shall verify equipment status and install or remove locks and tags as necessary.

4. NORMAL STARTUP OPERATION OF 5KV SWITCHGEAR BUS NO. 1.

A normal startup operation applies 4160V power to 5KV switchgear bus no. 1 from the LP&L transformer. Normal startup operation of 5KV switchgear bus no. 1 is accomplished by racking in and closing the main breaker. The following steps shall be executed to complete 5KV switchgear bus no. 1 startup.

4.1 Startup Preparations.

[1] Obtain an electrical switching order (ESO) from the supervisor to start up 5KV switchgear bus no. 1.

[2] Clear the area around the switchgear of all nonessential personnel until startup is complete.

[3] At the low resistance ground station, verify the grounding switch is open.

[4] At 5KV switchgear bus no. 1 (compartment 2), verify the 5KV switchgear bus no. 1 main breaker is open as follows:

[a] Open the compartment door.

[b] Confirm the mechanical status indicator shows OPEN.

[c] Close the compartment door.

[5] At compartment 3, verify the MCC-A feeder breaker is open as follows:

[a] Open the compartment door.

[b] Confirm the mechanical status indicator shows OPEN.

[c] Close the compartment door.

[6] At compartment 4, verify the TX-FW feeder breaker is open as follows:

[a] Open the compartment door.

[b] Confirm the mechanical status indicator shows OPEN.

[c] Close the compartment door.

[7] At compartment 5, verify the MCC-B feeder breaker is open as follows:

[a] Open the compartment door.

[b] Confirm the mechanical status indicator shows OPEN.

[c] Close the compartment door.

[8] At compartment 2, using the panel-mounted voltmeter, verify phase-to-phase voltages from the LP&L transformer are nominally 4160 volts. Report any phase-to-phase readings less than 4000 volts to the supervisor.

[9] Verify the amber CAP TRIP #1 CHARGED indicating light or the amber CAP TRIP # 2 CHARGED indicating light is on.

4.2 Switching Operations.

[1] Notify the control room operator 5KV switchgear bus no. 1 main breaker is being energized.

WARNING

An electrical fault and flash could cause injury or death to personnel. Use of insulating gloves, protective body gowns, hooded face shields, and insulating floor mats is required when racking in 5KV circuit breakers.

[2] At 5KV switchgear bus no. 1 (compartment 2), rack in the 5KV switchgear bus no. 1 main breaker as follows:

[a] Open the compartment door.

[b] Push the breaker completely into the compartment.

[c] Mount the drive motor on the right side of the compartment.

[d] Place the drive motor toggle switch in the center position.

[e] Insert the drive motor electric plug into the receptacle on the right side of the compartment.

[f] Pull the lever on the right side of the compartment towards the drive motor.

[g] Place the drive motor toggle switch in the RAISE position and hold the lever until the breaker is in the fully raised position.

NOTE 1

If the drive motor does not operate, the manual crank handle stored in 5KV switchgear building No. 722 can be used to raise the breaker. Clockwise rotation raises the breaker.

NOTE 2

When the breaker is racked in, the breaker closing springs will be automatically compressed by a high speed gear electric motor located in the breaker mechanism.

[h] Release the lever and place the drive motor toggle switch in the center position.

[i] Withdraw the drive motor electric plug from the receptacle.

[j] Verify the yellow CHGD flag is showing on the left side of the breaker.

[k] Remove the manual crank handle, if used, and close the compartment door.

[3] Verify the green OPEN indicating light is on and the red CLOSE and white TRIP indicating lights are off.

[4] Verify the following protective relays are reset:

[a] Instantaneous and time overcurrent relays 50/51 (3 places).

[b] Ground overcurrent relay 51G1 and 51G2.

[c] Lockout relay 86.

[5] Verify the red SYSTEM GROUNDING RESISTOR SHORTED indicating light is off.

[6] Verify the CAP TRIP #1 CHARGED indicating light or the CAP TRIP #2 CHARGED indicating light is on.

WARNING

An electrical fault and flash could cause injury or death to personnel. Use of insulating gloves, protective body gowns, hooded face shields, and insulating floor mats is required during 5KV switching operations.

[7] While standing on an insulating floor mat and to the hinged side of the compartment, turn the control switch to the CLOSE position. Return the control switch to the center position.

NOTE 1

If the control switch does not close the breaker, the breaker may be manually closed by pushing the MANUAL CLOSE.

NOTE 2

After closing, the high speed gear motor automatically recharges the closing springs.

4.3 Monitoring.

[1] Verify 5KV switchgear bus no. 1 is energized as follows:

[a] At compartment 2, verify the red CLOSE indicating light is on and the green OPEN and white TRIP indicating lights are off.

[b] Verify the red SYSTEM GROUNDING RESISTOR SHORTED indicating light is off.

[c] Verify the protective relays have not tripped.

[d] Using the panel-mounted voltmeter, verify phase-to-phase voltages from the LP&L transformer are nominally 4160 volts. Report any phase-to-phase readings less than 4000 volts to the supervisor.

[e] Using the panel-mounted ammeter, verify there is no load on the 5KV switchgear bus no. 1 main breaker.

[f] Open the compartment door and confirm the mechanical status indicator shows OPEN.

[g] Close the compartment door.

NOTE
5KV switchgear bus no. 1 is now energized and available for startup of 5KV electrical loads.

[2] Notify the control room operator 5KV switchgear bus no. 1 is now energized.

5. NORMAL SHUTDOWN OPERATION OF 5KV SWITCHGEAR BUS NO. 1.

Normal shutdown operation removes 4160V power from 5KV switchgear bus no. 1. Normal shutdown operation of 5KV switchgear bus no. 1 is accomplished by removing the load from 5KV switchgear bus no. 1, and opening the 5KV switchgear bus no. 1 main breaker. The following steps shall be executed to complete 5KV switchgear bus no. 1 shutdown.

NOTE
The LP&L transformer will remain energized.

5.1 Shutdown Preparations.

[1] Obtain an electrical switching order (ESO) from the supervisor to shut down bus no. 1.

[2] At the low resistance ground station, verify the grounding resistor shorting switch is open.

[3] Clear the area around 5KV switchgear bus no. 1 of all nonessential personnel until shutdown is complete.

5.2 Switching Operations.

[1] Notify the control room operator 5KV switchgear bus no. 1 is being de-energized.

[2] Remove the load from 5KV switchgear bus no. 1 as follows:

[a] Shut down TX-FW per work package 006 00.

[b] Shut down MCC-A per work package 007 00.

[c] Shut down MCC-B per work package 013 01.

[3] Open 5KV switchgear bus no. 1 main breaker as follows:

[a] At 5KV switchgear bus no. 1 (compartment 2), using the panel-mounted ammeter, verify there is no load on the 5KV switchgear bus no. 1 main breaker.

[b] Verify the amber CAP TRIP #1 CHARGED indicating light or the amber CAP TRIP #2 CHARGED indicating light is on.

WARNING

An electrical fault and flash could cause injury or death to personnel. Use of insulating gloves, protective body gowns, hooded face shields, and insulating floor mats is required during 5KV switching operations.

[c] While standing on an insulating floor mat and to the hinged side of the compartment, turn the control switch to the TRIP position. Return control switch to the center position.

NOTE

If the control switch does not trip the breaker, the breaker may be manually tripped by pushing the MANUAL TRIP.

5.3 Verification.

WARNING

120/240VAC control power is still present in each switchgear compartment

[1] At 5KV switchgear bus no. 1 (compartment 2), verify the green OPEN indicating light is on and the red CLOSE, white TRIP, and the red SYSTEM GROUNDING RESISTOR SHORTED indicating lights are off.

[2] Using the panel-mounted ammeter, verify there is no load on the 5KV switchgear bus no. 1 main breaker.

[3] Open the compartment door and verify the mechanical status indicator shows OPEN.

[4] Close the compartment door.

NOTE

5KV switchgear bus no. 1 is now de-energized.

[5] Notify the control room operator 5KV switchgear bus no. 1 is now de-energized.

6. ISOLATION PROCEDURE OF 5KV SWITCHGEAR BUS NO. 1.

Isolation of 5KV switchgear bus no. 1 prevents normal startup operation of 5KV switchgear bus no. 1 and removes all possible sources of power. Isolation procedure of 5KV switchgear bus no. 1 is accomplished by verifying the 5KV switchgear bus no. 1 main breaker and feeder breakers are open, racking out the feeder breakers and the main breaker, attaching a lock and tag to the main breaker and feeder breakers and logging the locks and tags in the lockout/tagout log. The following steps shall be executed only after 5KV switchgear bus no. 1 shutdown operation (paragraph 5 above) is complete.

6.1 Coordination of Operations.

[1] Obtain an electrical switching order (ESO) from the supervisor to isolate 5KV switchgear bus no. 1.

[2] At the low resistance ground station, verify the grounding resistor shorting switch is open.

[3] Clear the area around 5KV switchgear bus no. 1 of all nonessential personnel until isolation is complete.

6.2 Switching Operations.

[1] Notify the control room operator 5KV switchgear bus no. 1 is being isolated.

[2] At 5KV switchgear bus no. 1 (compartments 2, 3, 4, and 5), open each compartment door and verify the mechanical status indicators show OPEN.

WARNING

An electrical fault and flash could cause injury or death to personnel. Use of insulating gloves, protective body gowns, hooded face shields, and insulating floor mats is required when racking out 5KV circuit breakers.

[3] At compartments 2, 3, 4, and 5, rack out breakers as follows:

[a] Open the compartment door.

[b] Mount the drive motor on the right side of the compartment.

[c] Place the drive motor toggle switch in the center position.

[d] Insert the drive motor electric plug into the receptacle on the right side of the compartment.

[e] Pull the lever on the right side of the compartment towards the drive motor.

[f] Place the drive motor toggle switch in the LOWER position and hold the lever until the breaker touches the floor of the compartment.

NOTE

If the drive motor does not operate, the manual crank handle stored in 5KV switchgear building 722 can be used to lower the breaker. Counterclockwise rotation lowers the breaker.

[g] Release the lever and place the drive motor toggle switch in the center position.

[h] Withdraw the drive motor electric plug from the receptacle.

[i] Remove the manual crank handle, if used, and close the compartment door.

[j] Verify the green OPEN, red CLOSED, and white TRIP indicating lights are off.

NOTE

LP&L owns the substation that feeds the 5KV switchgear bus no. 1 and are responsible for switching operations of the overhead air disconnect switches.

[4] Verify the air disconnect switches located in the LP&L owned substation that feed 5KV switchgear bus no. 1 are open.

NOTE

5KV switchgear bus no. 1 is now isolated.

[5] Notify the control room operator 5KV switchgear bus no. 1 is now isolated.

6.3 Securing the Equipment.

WARNING

Failure to lock out the 5KV switchgear bus no. 1 main breaker (compartment 2) will create a potential hazard for personnel. Locks and tags shall remain in place until all clearance orders (safe work permits) associated with 5KV switchgear bus no. 1 have been issued.

[1] At 5KV switchgear bus no. 1 (compartment 2), attach a lock and tag to the main breaker compartment door.

[2] At compartment 3, attach a lock and tag to the MCC-A feeder breaker compartment door.

[3] At compartment 4, attach a lock and tag to the TX-FW feeder breaker compartment door.

[4] At compartment 5, attach a lock and tag to the MCC-B feeder breaker compartment door.

[5] The following steps shall be executed only after LP&L has opened the overhead air disconnect switches:

[a] Attach a lock and tag on the handle of the open air disconnect switches.

[b] Attach a lock and tag to both substation main gates.

[c] Attach temporary ground cables from the overhead aluminum buses feeding 5KV switchgear bus no. 1 to the grounding system for building 722.

[6] Enter the number of each lock and tag and the name of the person who installed them in the lockout/tagout log.

NOTE

5KV switchgear bus no. 1 is now secured.

[7] Notify the control room operator 5KV switchgear bus no. 1 is now secured.

7. AUTOMATIC SHUTDOWN OF 5KV SWITCHGEAR BUS NO. 1.

An automatic shutdown of 5KV switchgear bus no. 1 occurs when protective devices detect an abnormal condition and trip open the 5KV switchgear bus no. 1 main breaker. In the event of an automatic shutdown, the following steps shall be executed to assist maintenance personnel in determining the cause of the shutdown.

7.1 Shutdown Investigation.

[1] Notify the control room operator 5KV switchgear bus no. 1 has automatically shut down and is being investigated.

WARNING

Due to the unknown nature or exact location of the condition which caused the automatic shutdown, all nonessential personnel shall stay clear of power distribution equipment associated with 5KV switchgear bus no. 1.

[2] Clear the area around the switchgear of all nonessential personnel until isolation procedure is complete.

[3] Inspect 5KV switchgear bus no. 1 for any signs of damage or abnormal conditions which may affect the system operation.

[4] At 5KV switchgear bus no. 1 (compartment 2), record the status of the following items:

[a] Lockout relay (86) - tripped or reset.

[b] Green, red, and white indicating lights - on or off.

[c] Protective relays trip flags - showing or reset.

[d] Mechanical status indicator - open or closed.

[5] Using the panel-mounted voltmeter, record the phase-to-phase voltages.

[6] At compartments 3, 4, and 5, record the status of the following items:

[a] Lockout relay (86) - tripped or reset.

[b] Green, red, and white indicating lights - on or off.

[c] Protective relays trip flags - showing or reset.

[d] Mechanical status indicator - open or closed.

[7] At the low resistance ground station, record the status of the grounding switch - open or closed.

[8] Obtain the data log from the DCS printout in the control room to establish time of shutdown.

7.2 Switching and Isolation Operations.

[1] If the 5KV switchgear bus no. 1 main breaker has tripped open, then perform isolation procedure per paragraph 6 above.

[2] Report all findings and actions taken to the supervisor.

8. RECORDS.

A. Any lock or tag attached to or removed from 5KV switchgear bus no. 1 and associated equipment shall be entered in the lockout/tagout log.

B. Any findings of abnormal conditions shall be noted and reported to the control room operator, the supervisor, and the maintenance manager. A work request shall be initiated to correct the problem.

APPENDIX A

ONE-LINE DIAGRAM

5KV SWITCHGEAR

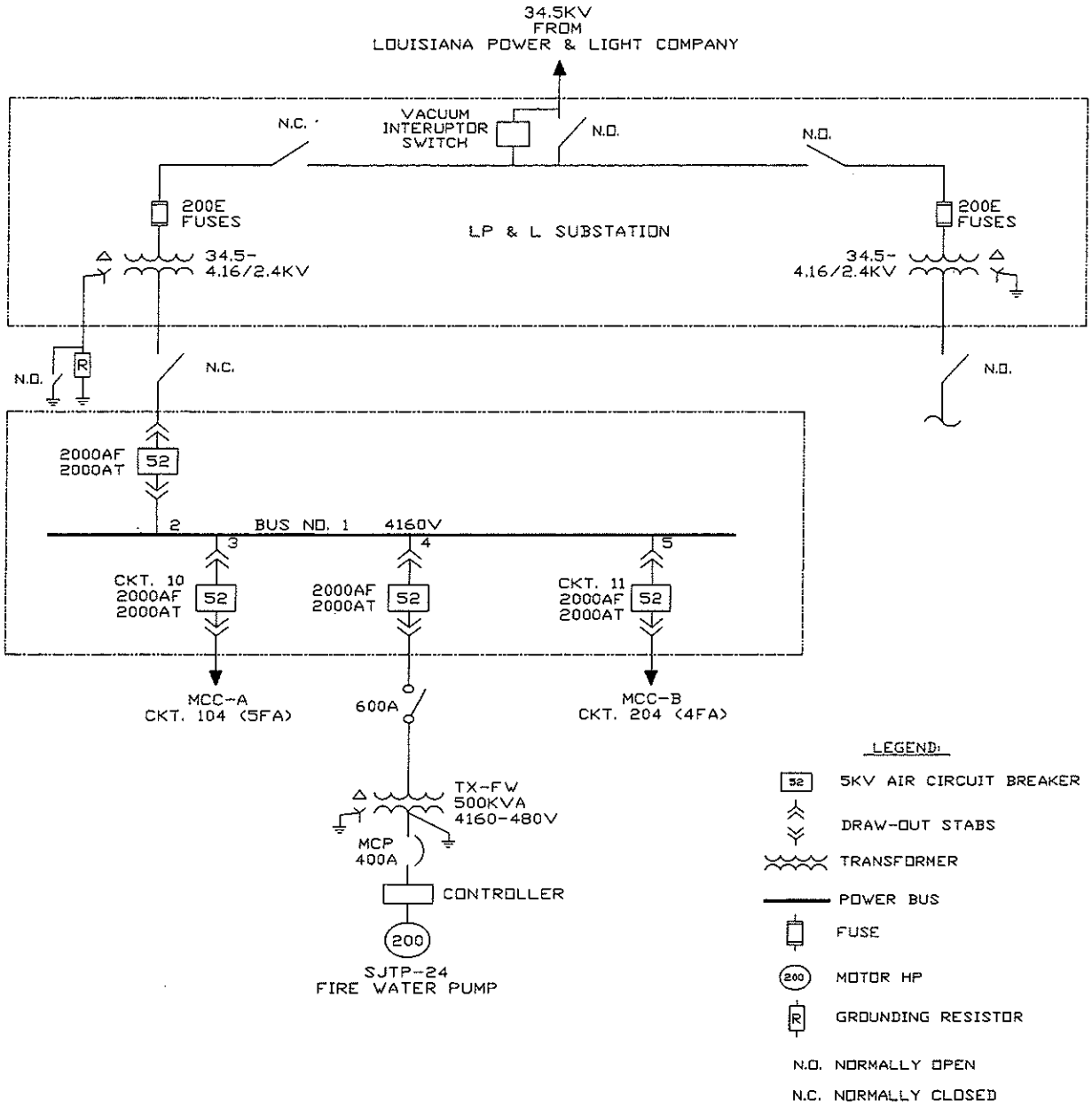

APPENDIX B

ELEVATIONS (Sheet 1 of 2)

5KV SWITCHGEAR BUS NO. 1

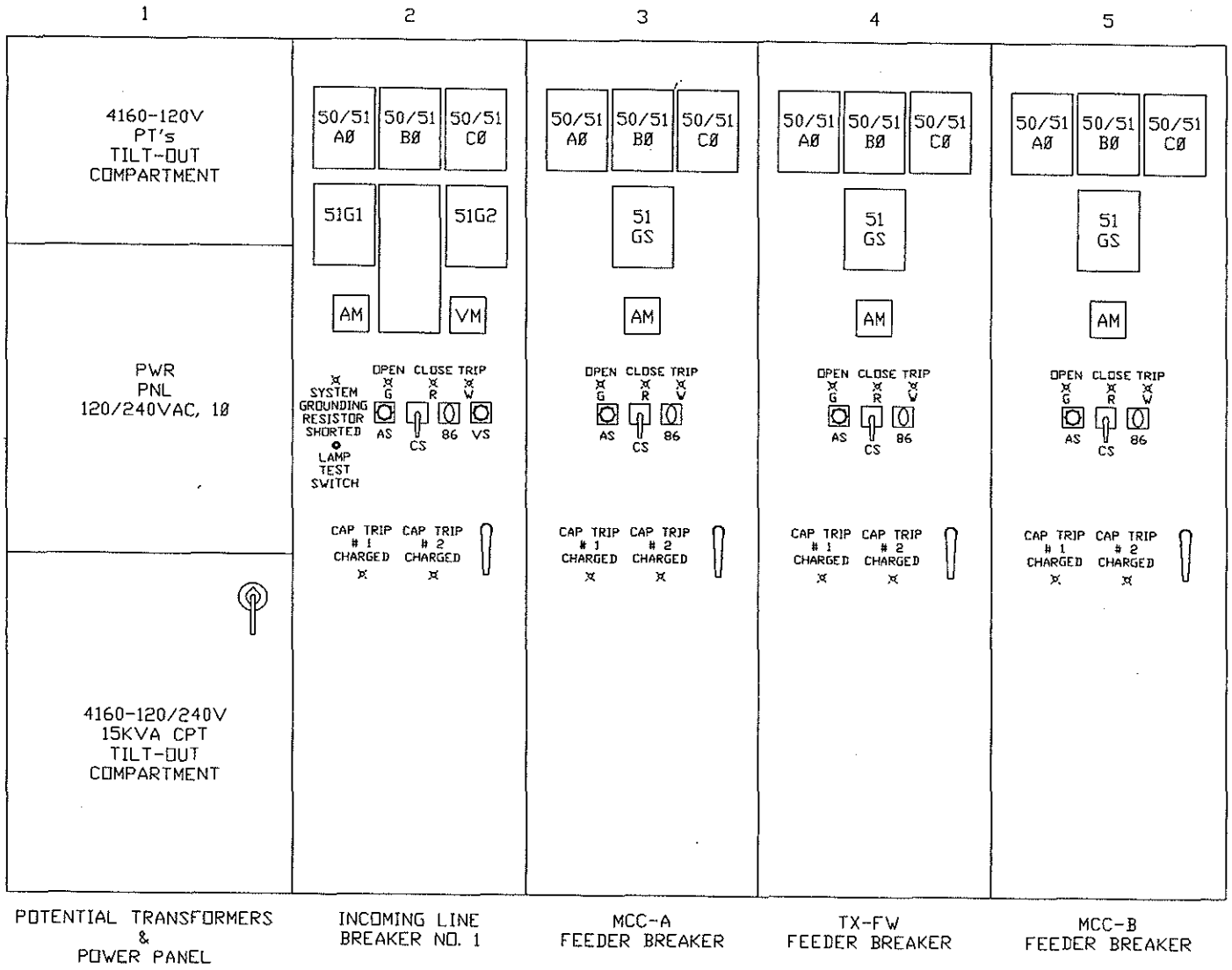

APPENDIX B

ELEVATIONS
(Sheet 2)

5KV SWITCHGEAR BUS NO. 1
MAIN BREAKER

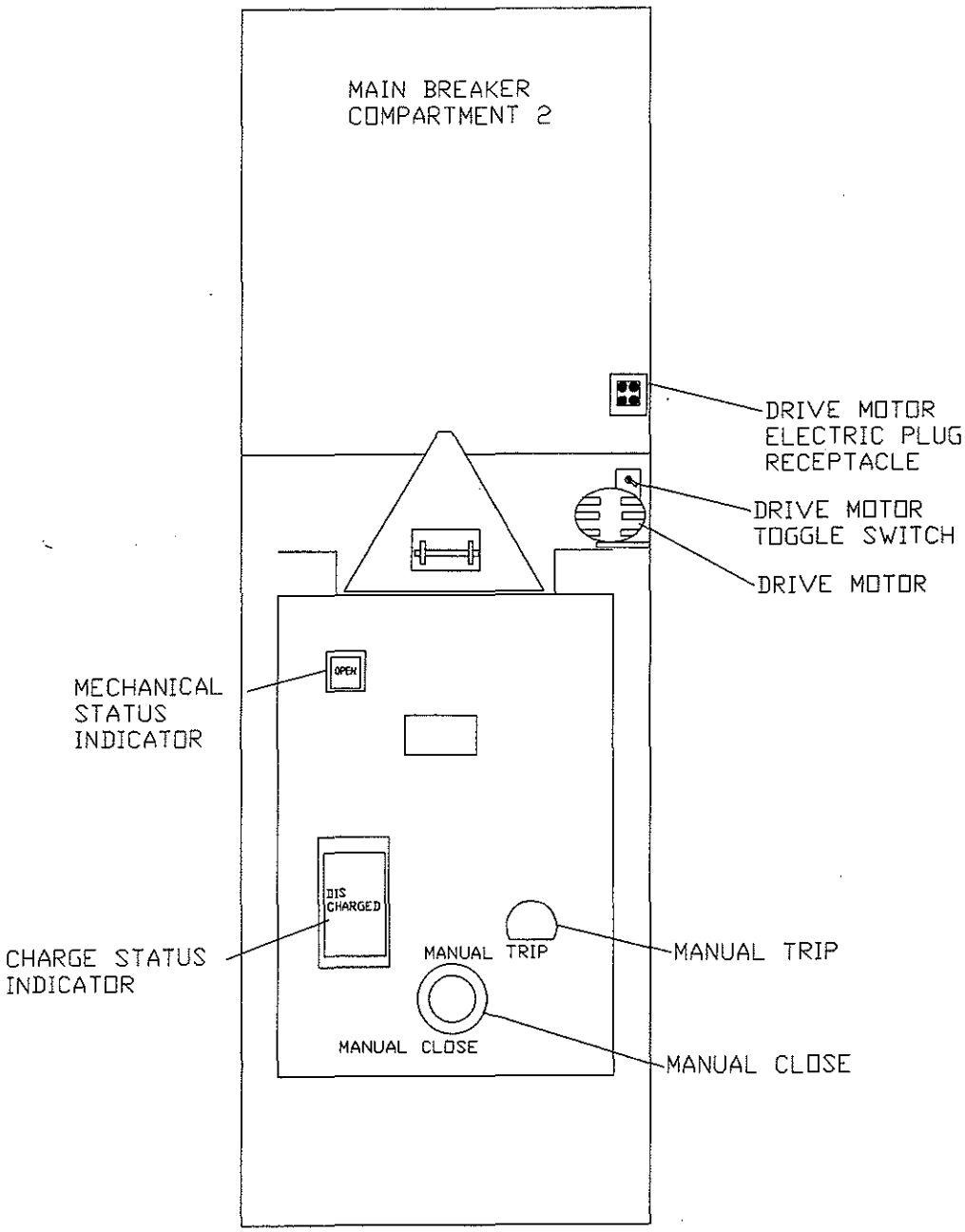

APPENDIX C

ELECTRICAL LOADS
(Sheet 1 of 6)

The following electrical loads will be affected by normal shutdown or automatic shutdown of 5KV switchgear bus no. 1:

SJTP-24 Fire water pump via 500KVA transformer TX-FW.
Motor Control Center A (MCC-A):
- SJT-1 Booster pump.
- SJT-3 Booster pump.
- SJT-4 Booster pump.
- SJT-6 Accelerated fill pump.
- **Motor Control Center 1A (MCC-1A) via 1000KVA transformer TX-1:**
  - MCC-1A/MCC-1B bus-tie breaker:
  - DP-A Oil Q/A laboratory building distribution panel.
  - Control building.
  - Maintenance building.
  - MOV-2D-20-W1.
  - MOV-T520-2.
  - MOV-T520-3.
  - MOV-T620-4.
  - MOV-2D-20-F1.
  - MOV-T520-5.
  - MOV-T520-4.
  - Control Valve 1D-20-C.
  - Control Valve 2D-20-C.
  - MOV-120-D.
  - MOV-220-D.
  - MOV-320-D3.
  - MOV-T420-3.
  - Lift station no. 1.
  - LP-1 Lighting panel.
  - 15KVA transformer for LP-1.
  - SJTP-21 Retention pond no. 2 sump pump.
  - SJTP-22 Retention pond no. 2 sump pump.
  - MOV-120-S.
  - MOV-220-S.
  - MOV-320-S1.
  - MOV-320-S2.
  - MOV-T420-2.
  - MOV-T420-5.
  - MOV-T420-4.
  - MOV-T620-2.
  - MOV-T620-3.
  - MOV-T620-5.
  - MOV-1D-20-F1.
  - MOV-1D-20-W1.
  - MOV-1D-20-F2.

APPENDIX C

ELECTRICAL LOADS
(Sheet 2)

MOV-2D-20-F2.
Feeder to B1, SJT-23A and SJT-23B.

Motor Control Center 3 (MCC-3) via 150KVA transformer TX-3:

MOV-BC-20-T.
MOV-CL-20-9.
MOV-WI-20-T.
MOV-BC-20-R1.
MOV-WI-20-R1.
MOV-WI-20-R2.
MOV-BC-20-R2.
Repeater building.
SJT-22 Slop oil sump pump for tank T-10.
Floodlights.
LP-3 Lighting panel.
15KVA transformer for LP-3.
MOV-K20-BC2.
MOV-K20-BC1.
MOV-K20-BC3.

Motor Control Center 4 (MCC-4) via 750KVA transformer TX-4:

SJTP-101 Stripper pump for tank T-1.
SJTP-102 Stripper pump for tank T-2.
Streetlights.
Meter area floodlights.
MOV-BC-20-W2.
MOV-BC-20-F2.
MOV-CL20-2.
MOV-CL20-5.
MOV-K20-3.
MOV-K20-4
ELT-2 Fire water pump house.
SJTP-23 Fire water jockey pump, main site.
Bladder tank floodlights.
MOV-CL20-3.
Control valve WI-120-C.
LP-4 Lighting panel.
15KVA transformer for LP-4 lighting panel.
MOV-BCM120-1.
MOV-BCM120-2.
MOV-BCM120-P1.
MOV-WP20-K.
MOV-BCM220-1.
MOV-BCM220-2.
MOV-BCM220-P1.
MOV-BCM320-1.
MOV-BCM320-2.
MOV-BCM320-P1.
SJTP-19 Retention pond no. 1 sump pump.

APPENDIX C

ELECTRICAL LOADS
(Sheet 3)

Control valve BCM120-C.
Control valve BCM220-C.
Control valve BCM320-C.
SJTP-20 Retention pond no.1 sump pump.
MOV-BC-20-W3.
MOV-BC-20-F1.
MOV-WI-20-W1.
MOV-CL20-6.
MOV-WIM120-1.
MOV-WIM120-2.
MOV-WIM120-P1.
MOV-WP20-WI.
MOV-WIM220-1.
MOV-WIM220-2.
MOV-WIM220-P1.
MOV-WI-20-F2.
MOV-WIM320-1.
MOV-WIM320-P1.
MOV-WIM320-2.
MOV-WI-20-W2.
Control valve WIM120-C.
Control valve WIM220-C.
Control valve WIM320-C.
Control valve BC120-C.
MOV-WI-20-F1.
MOV-1720-D.
MOV-WI-20-F3.
MOV-1620-D.
MOV-1520-D.
MOV-1720-S.
MOV-1520-S.
MOV-1620-S.
Control valve WP20-C.
Temp pump floodlights.
SJT-19 Drain oil sump pump for tank T-7.
SJT-110 Crude oil mixer for tank T-2.
SJT-111 Crude oil mixer for tank T-2.
SJT-112 Crude oil mixer for tank T-2.
SJT-107 Crude oil mixer for tank T-1.
SJT-108 Crude oil mixer for tank T-1.
SJT-109 Crude oil mixer for tank T-1.
Cathodic protection rectifier.

APPENDIX C

ELECTRICAL LOADS
(Sheet 4)

Motor Control Center B (MCC-B):
SJT-7 Accelerated fill pump.
SJT-8 Accelerated fill pump.
SJT-5 Booster pump.
SJT-2 Booster pump.
Motor Control Center 1B (MCC-1B) via 1000KVA transformer TX-2:
MCC-1A/1B bus-tie breaker.
MOV-320-D1.
MOV-320-D2.
MOV-420-D2.
Floodlights.
Streetlights.
SJT-20 Drain oil sump pump for tank T-8.
MOV-T320-2.
MOV-T220-3.
MOV-T320-5.
Control valve 420-D1-C.
Control valve 520-D1-C.
MOV-T120-4.
MOV-K20-7.
MOV-T120-5.
MOV-T120-2.
MOV-CL20-1.
MOV-CL20-8.
MOV-WI-20-W3.
MOV-K20-6.
SJT-113 Crude oil tank mixer for tank T-3.
SJT-114 Crude oil tank mixer for tank T-3.
SJT-115 Crude oil tank mixer for tank T-4.
SJT-116 Crude oil tank mixer for tank T-4.
Cathodic protection.
MOV-K20-2.
MOV-K20-1.
MOV-BC-20-W1.
MOV-K20-8.
MOV-K20-9.
MOV-T220-4.
MOV-T220-5.
MOV-T120-3.
MOV-T220-2.
SJTP-103 Stripper pump for tank T-3.
MOV-T320-3.
MOV-T320-4.
SJTP-104 Stripper pump for tank T-4.

APPENDIX C

ELECTRICAL LOADS
(Sheet 5)

MOV-420-S1.
MOV-420-S2.
MOV-520-S1.
MOV-520-S2.
Motor Control Center 2 (MCC-2):
- EPP-1 Power panel.
- 5KVA transformer at emergency generator SJEG-10.
- Control building emergency power.
- Maintenance building emergency power.
- Uninterruptible power supply.
- MOV-T320-1.
- MOV-T420-1.
- **Motor Control Center 3E (MCC-3E):**
  - MOV-BC-20-E.
  - MOV-WI-20-B.
  - Radio antenna tower.
  - SJT-22 Slop oil sump pump for tank T-10.
- **Motor Control Center 4E (MCC-4E):**
  - MOV-T120-1.
  - MOV-T220-1.
  - SJT-19 Drain oil sump pump for tank T-7.
- **Motor Control Center 5E (MCC-5E):**
  - Sewage treatment plant no. 2.
  - Lift station no. 2.
  - Permanent facility.
  - LP-5 Lighting panel via 15KVA transformer LT-5.
  - MOV-T520-1.
  - MOV-T620-1.
  - Security Operations Center (SOC).
  - Guardhouse.
  - Streetlights.
  - Cantilever barrier no. 1.
  - Cantilever barrier no. 2.

Motor Control Center 5 (MCC-5) via 750KVA transformer TX-5:
- SJTP-105 Stripper pump for tank T-5.
- Streetlights (North).
- SJTP-106 Stripper pump for tank T-6.
- Cathodic protection rectifier.
- Streetlights (East).
- SJT-119 Crude oil mixer for tank T-5.
- SJT-118 Crude oil mixer for tank T-5.
- SJT-121 Crude oil mixer for tank T-6.
- SJT-122 Crude oil mixer for tank T-6.

Motor Control Center 5A (MCC-5A) via 750KVA transformer TX-5:
- SJT-117 Crude oil mixer for tank T-5.
- SJT-120 Crude oil mixer for tank T-6.

APPENDIX C

ELECTRICAL LOADS
(Sheet 6)

Spare parts warehouse.
Floodlights.

Motor Control Center 6 (MCC-6) via 500KVA transformer TX-6:

Streetlights.
SJTP-18A Effluent sump pump for waste water treatment.
SJTP-18B Effluent sump pump for waste water treatment.
SJTP-18C Effluent sump pump for waste water treatment.
SJTP-17A Skimmer pump for waste water treatment.
SJTP-17B Skimmer pump for waste water treatment.
Floodlights.
LP-6 Lighting panel.
15KVA transformer for LP-6 lighting panel.
SJTP-15A Oily water lift station pump.
SJTP-15B Oily water lift station pump.
SJTP-15C Oily water lift station pump.
SJTP-16A Oil sump pump.
SJTP-16B Oil sump pump.

NORMAL OPERATING PROCEDURE

SAINT JAMES SITE

FIRE WATER PUMP TRANSFORMER TX-FW

NORMAL OPERATING PROCEDURE

SAINT JAMES SITE

FIRE WATER PUMP TRANSFORMER TX-FW

List of Effective Work Package Pages

Page Number	Revision Number	Page Number	Revision Number
1 thru 12	2		

Record of Applicable Technical Directives

None

TABLE OF CONTENTS

Para.	Title	Page
1.	INTRODUCTION	3
1.1	Purpose	3
1.2	Scope	3
1.3	Applicability	3
1.4	Reference Documents	3
2.	PRECAUTIONS AND LIMITATIONS	3
3.	PREREQUISITE ACTIONS	4
4.	NORMAL STARTUP OPERATION OF FIRE WATER PUMP TRANSFORMER TX-FW	4
4.1	Startup Preparations	4
4.2	Switching Operations	5
4.3	Monitoring	7
5.	NORMAL SHUTDOWN OPERATION OF FIRE WATER PUMP TRANSFORMER TX-FW	7
5.1	Shutdown Preparations	7
5.2	Switching Operations	7
5.3	Verification	8
6.	ISOLATION PROCEDURE OF FIRE WATER PUMP TRANSFORMER TX-FW	8
6.1	Coordination of Operations	8
6.2	Switching Operations	9
6.3	Securing the Equipment	10
7.	AUTOMATIC SHUTDOWN OF FIRE WATER PUMP TRANSFORMER TX-FW	10
7.1	Shutdown Investigation	10
7.2	Switching and Isolation Operations	11
8.	RECORDS	11
Appendix A	One-Line Diagram	12

1. INTRODUCTION.

Fire water pump transformer (TX-FW) is located outdoors, east of the pump house building no. 716. TX-FW is fed from 5KV switchgear bus no. 1 (compartment 4) and provides 480-volt, three-phase power to fire water pump SJTP-24 via a 480V motor controller. The pump and motor controller are located in the pump house building. TX-FW is a 4160-480V, delta-wye, 500KVA, step-down transformer with a 600-ampere load break disconnect switch on the primary side. See Appendix A, Fire Water Pump Transformer TX-FW One-Line Diagram.

1.1 **Purpose.** This procedure provides step-by-step operations which shall be performed to safely and efficiently operate fire water pump transformer TX-FW.

1.2 **Scope.** This procedure provides directions to an authorized electrician for the performance of the following activities under normal conditions:

A. Start up TX-FW.

B. Shut down TX-FW.

C. Isolate TX-FW.

D. Investigate an automatic shutdown of TX-FW.

1.3 **Applicability.** The activities described in this procedure shall be performed by an authorized electrician at the request of the supervisor.

1.4 **Reference Documents.**

A. Block Diagram Power Distribution, drawing SJ-E-302-018.

B. One-Line Diagram Substation and 5KV Switchgear, drawing SJ-E-302-055.

C. Work package 005 00, 5KV Switchgear Bus No. 1.

2. PRECAUTIONS AND LIMITATIONS.

The following precautions and limitations apply to the operation of TX-FW:

A. All nonessential personnel shall maintain a minimum distance of 10 feet from TX-FW when power is first applied, until startup is complete.

B. Use of insulating gloves, protective body gowns, hooded face shields, and insulating floor mats are required during 5KV racking and switching operations.

C. A safety watch shall be stationed within view of the electrician performing 5KV switching operations.

D. The power source for TX-FW is 5KV switchgear bus no. 1. The nominal phase-to-phase voltage from this source is 4160 volts (4000 volts minimum).

E. If rain is imminent or is falling, the doors to the TX-FW enclosure shall remain closed to prevent water entry.

F. OSHA approved hearing protection must be worn inside the pump house building while pumps are running.

3. PREREQUISITE ACTIONS.

The following prerequisite actions shall be accomplished prior to operation of TX-FW:

A. Review the job safety analysis (JSA), if applicable, on this equipment for potential safety hazards and review associated one-line diagrams with the supervisor.

B. The supervisor shall verify that routine preventive maintenance has been performed on TX-FW and its components as described in the applicable maintenance requirement card (MRC).

C. The operations shift supervisor shall ensure all clearance orders (Safe Work Permits) associated with TX-FW have been issued.

D. Visually inspect TX-FW and 5KV switchgear bus no. 1 (compartment 4) for any evidence of moisture, rodents, or other signs of damage. Report same to supervisor.

E. Visually check for any temporary wiring, grounds, locks, or tags. All findings shall be reported to the control room operator and the supervisor.

F. Site operations personnel shall verify equipment status and install or remove locks and tags as necessary.

4. NORMAL STARTUP OPERATION OF FIRE WATER PUMP TRANSFORMER TX-FW.

A normal startup operation is performed when 4160V power is applied to TX-FW from 5KV switchgear bus no. 1. The following steps shall be executed to complete TX-FW startup.

4.1 Startup Preparations.

[1] Obtain an electrical switching order (ESO) from the supervisor.

[2] Clear the area around TX-FW of all nonessential personnel until startup is complete.

[3] At 5KV switchgear bus no. 1 (compartment 2), using the panel-mounted voltmeter, verify that phase-to-phase bus voltages are nominally 4160 volts . Report any phase-to-phase readings less than 4000 volts to the supervisor.

[4] At TX-FW, verify that the load break disconnect switch is in the CLOSED position.

[5] At the pump house building, verify that the SJTP-24 motor controller is off by visually checking the position of the circuit breaker.

4.2 Switching Operations.

[1] Notify the control room operator that the TX-FW feeder breaker is being racked in.

WARNING

An electrical fault and flash could cause injury or death to personnel. Use of insulating gloves, protective body gowns, hooded face shields, and insulating floor mats are required when racking in 5KV circuit breakers.

[2] At 5KV switchgear bus no. 1 (compartment 4), rack in the TX-FW feeder breaker as follows:

[a] Open the compartment door.

[b] Push the breaker completely into the compartment.

[c] Mount the drive motor on the right side of the compartment.

[d] Place the drive motor toggle switch in the center position.

[e] Insert the drive motor electric plug into the receptacle on the right side of the compartment.

[f] Pull the lever on the right side of the compartment towards the drive motor.

[g] Place the drive motor toggle switch in the RAISE position and hold the lever until the breaker is in the fully raised position.

NOTE 1

If the drive motor does not operate, the manual crank handle stored in 5KV switchgear building 722 can be used to raise the breaker. Clockwise rotation raises the breaker.

NOTE 2

When the breaker is racked in, the breaker closing springs will be automatically compressed by a high speed gear electric motor located in the breaker mechanism.

[h] Release the lever and place the drive motor toggle switch in the center position.

[i] Withdraw the drive motor electric plug from the receptacle.

[j] Verify that the yellow CHGD flag is showing on the left side of the breaker.

[k] Remove the manual crank handle, if used, and close the compartment door.

[3] Verify that the green OPEN indicating light is on and the red CLOSE and white TRIP indicating lights are off.

[4] Verify that the following protective relays are reset:

[a] Phase overcurrent relays - 50/51 (3 places).

[b] Ground overcurrent relay - 51GS.

[c] Lockout relay - 86.

[5] Notify the control room operator that the TX-FW feeder breaker is being closed.

[6] Verify that the CAP TRIP #1 CHARGED indicating light or the CAP TRIP #2 CHARGED indicating light is on.

WARNING

An electrical fault and flash could cause injury or death to personnel. Use of insulating gloves, protective body gowns, hooded face shields, and insulating floor mats are required during 5KV switching operations.

[7] While standing on an insulating floor mat and to the hinged side of the compartment, turn the control switch to the CLOSE position. Return the control switch to the center position.

NOTE 1

If the control switch does not close the breaker, open the compartment door and manually close the breaker by pushing the MANUAL CLOSE.

NOTE 2
After closing, the high speed gear motor automatically recharges the closing springs.

4.3 Monitoring.

[1] At 5KV switchgear bus no. 1 (compartment 4), verify that the red CLOSE indicating light is on and the green OPEN and white TRIP indicating lights are off.

[2] Verify that the protective relays have not tripped.

[3] Using the panel-mounted ammeter, verify that there is no load on the TX-FW feeder breaker.

[4] At compartment 2, using the panel-mounted voltmeter, verify that incoming bus voltages for bus no. 1 are nominally 4160 volts.

NOTE
TX-FW is now energized.

[5] Notify the control room operator that TX-FW is now energized.

5. NORMAL SHUTDOWN OPERATION OF FIRE WATER PUMP TRANSFORMER TX-FW.

A normal shutdown operation is performed when 4160V power is removed from TX-FW and SJTP-24 is not running. The following steps shall be executed to complete TX-FW shutdown.

5.1 Shutdown Preparations.

[1] Obtain an electrical switching order (ESO) from the supervisor.

[2] Clear the area around TX-FW and 5KV switchgear bus no. 1 of all nonessential personnel until shutdown is complete.

5.2 Switching Operations.

[1] Notify the control room operator that the TX-FW feeder breaker at 5KV switchgear bus no. 1 is being opened.

[2] At 5KV switchgear bus no. 1 (compartment 4), using the panel-mounted ammeter, verify that there is no load on the TX-FW feeder breaker.

[3] Verify that the CAP TRIP # 1 CHARGED indicating light or the CAP TRIP # 2 CHARGED indicating light is on.

WARNING

An electrical fault and flash could cause injury or death to personnel. Use of insulating gloves, protective body gowns, hooded face shields, and insulating floor mats are required during 5KV switching operations.

[4] While standing on an insulating floor mat and to the hinged side of the compartment, turn the control switch to the TRIP position. Return the control switch to the center position.

NOTE

If the control switch does not trip the breaker, open the compartment door and manually trip the breaker by pushing the MANUAL TRIP.

WARNING

120/240VAC control power is still present in each switchgear compartment.

5.3 Verification.

[1] At 5KV switchgear bus no. 1 (compartment 4), verify that the green OPEN indicating light is on and the red CLOSE and white TRIP indicating lights are off.

[2] Using the panel mounted ammeter, verify that there is no load on the TX-FW feeder breaker.

[3] Open the compartment door and verify that the mechanical status indicator shows OPEN.

[4] Close the compartment door.

NOTE

TX-FW is now shutdown.

[5] Notify the control room operator that TX-FW is now shutdown.

6. ISOLATION PROCEDURE OF FIRE WATER PUMP TRANSFORMER TX-FW.

Isolation of TX-FW will prevent normal startup operation of TX-FW. The following steps shall be executed only after TX-FW shutdown operation (paragraph 5 above) is complete.

6.1 Coordination of Operations.

[1] Obtain an electrical switching order (ESO) from the supervisor.

[2] Notify the control room operator that TX-FW is being isolated.

6.2 Switching Operations.

[1] At 5KV switchgear bus no. 1 (compartment 4), open the compartment door and verify that the mechanical status indicator shows OPEN.

WARNING

An electrical fault and flash could cause injury or death to personnel. Use of insulating gloves, protective body gowns, hooded face shields, and insulating floor mats are required when racking out 5KV circuit breakers.

[2] Rack out the TX-FW feeder breaker as follows:

[a] Open the compartment door.

[b] Mount the drive motor on the right side of the compartment.

[c] Place the drive motor toggle switch in the center position.

[d] Insert the drive motor electric plug into the receptacle on the right side of the compartment.

[e] Pull the lever on the right side of the compartment towards the drive motor.

[f] Place the drive motor toggle switch in the LOWER position and hold the lever until the breaker touches the floor of the compartment.

NOTE

If the drive motor does not operate, the crank handle stored in 5KV switchgear building 722 can be used to lower the breaker. Counterclockwise rotation lowers the breaker.

[g] Release the lever and place the drive motor toggle switch in the center position.

[h] Withdraw the drive motor electric plug from the receptacle.

[i] Remove the crank handle, if used, and close the compartment door.

NOTE 1

The green OPEN, red CLOSE, and white TRIP indicating lights should be off.

NOTE 2

TX-FW is now isolated.

[3] Notify the control room operator that TX-FW is now isolated.

6.3 Securing the Equipment.

WARNING

Failure to lock out the TX-FW feeder breaker will create a potential hazard for personnel performing maintenance on TX-FW.

[1] At 5KV switchgear bus no. 1 (compartment 4), attach a lock and tag to the compartment door.

[2] Log all locks and tags installed as part of the isolation procedure.

NOTE 1

TX-FW is now secured for maintenance.

NOTE 2

The number of the lock and tag as well as the name of the person who installed them shall be entered in the lockout/tagout log.

NOTE 3

A clearance order (Safe Work Permit) shall be obtained from the operations shift supervisor prior to start of work.

[3] Notify the control room operator that TX-FW is now secured for maintenance.

7. AUTOMATIC SHUTDOWN OF FIRE WATER PUMP TRANSFORMER TX-FW.

An automatic shutdown of TX-FW occurs when protective devices detect an abnormal condition and trip open the TX-FW feeder breaker at 5KV switchgear bus no. 1. In the event of an automatic shutdown, the following steps shall be executed to assist maintenance personnel in determining the cause of the shutdown.

7.1 Shutdown Investigation.

[1] Notify the control room operator that TX-FW has automatically shutdown and is being investigated.

WARNING

Due to the unknown nature or exact location of the condition which caused the automatic shutdown, all nonessential personnel shall stay clear of power distribution equipment associated with TX-FW.

[2] Clear the area around TX-FW and 5KV switchgear bus no. 1 of all nonessential personnel until isolation procedure is complete.

[3] Inspect the exterior of TX-FW and 5KV switchgear bus no. 1 for any signs of damage or conditions which may affect the system operation.

[4] At 5KV switchgear bus no. 1 (compartment 4), record the status of the following items:

[a] Lockout relay (86) - tripped or reset.

[b] Green, red, and white indicating lights - on or off.

[c] Protective relays - tripped or reset.

[d] Mechanical status indicator - open or closed.

7.2 Switching and Isolation Operations.

[1] If the TX-FW feeder breaker has tripped open, then perform isolation procedure per paragraph 6 above.

[2] Report all findings and actions taken to the supervisor.

8. RECORDS.

A. Any lock or tag attached to or removed from 5KV switchgear bus no. 1 (compartment 4) shall be entered in the lockout/tagout log.

B. Any findings of abnormal conditions shall be noted and reported to the control room operator, the supervisor, and the maintenance manager. A work request shall be initiated to correct the problem.

APPENDIX A

ONE LINE DIAGRAM

FIRE WATER PUMP TRANSFORMER TX-FW

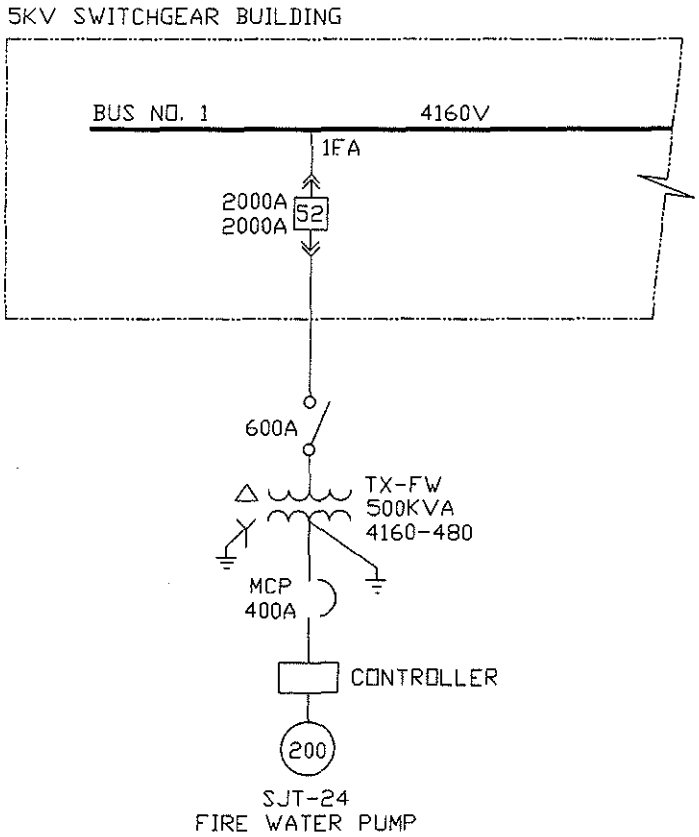

LEGEND:

- 52 — 5KV AIR CIRCUIT BREAKER
- DRAW-OUT STABS
- TRANSFORMER
- POWER BUS
- FUSE
- 200 — MOTOR HP

NORMAL OPERATING PROCEDURE

SAINT JAMES SITE

5KV MOTOR CONTROL CENTER MCC-A

NORMAL OPERATING PROCEDURE

SAINT JAMES SITE

5KV MOTOR CONTROL CENTER MCC-A

List of Effective Work Package Pages

Page Number	Revision Number	Page Number	Revision Number
1 thru 24	2		

Record of Applicable Technical Directives

None

TABLE OF CONTENTS

Para.	Title	Page
1.	INTRODUCTION	4
1.1	Purpose	4
1.2	Scope	4
1.3	Applicability	4
1.4	Reference Documents	4
2.	PRECAUTIONS AND LIMITATIONS	5
3.	PREREQUISITE ACTIONS	5
4.	NORMAL STARTUP OPERATION OF MCC-A	5
4.1	Startup Preparations	6
4.2	Switching Operations	6
4.3	Monitoring	8
5.	NORMAL STARTUP OPERATION OF 5KV MOTOR STARTERS FOR PUMPS SJT-1, SJT-3, SJT-4, AND SJT-6	8
5.1	Startup Preparations	8
5.2	Switching Operations	9
5.3	Monitoring	9
6.	NORMAL SHUTDOWN OPERATION OF 5KV MOTOR STARTERS FOR PUMPS SJT-1, SJT-3, SJT-4, AND SJT-6	9
6.1	Shutdown Preparations	10
6.2	Switching Operations	10
6.3	Verification	10
7.	ISOLATION PROCEDURE OF 5KV MOTOR STARTERS FOR PUMPS SJT-1, SJT-3, SJT-4, AND SJT-6	10
7.1	Coordination of Operations	11
7.2	Switching Operations	11
7.3	Securing the Equipment	12
8.	NORMAL SHUTDOWN OPERATION OF MCC-A	12
8.1	Shutdown Preparations	12
8.2	Switching Operations	12
8.3	Verification	13
9.	ISOLATION PROCEDURE OF MCC-A	14
9.1	Coordination of Operations	14
9.2	Switching Operations	14

TABLE OF CONTENTS (Continued)

Para.	Title	Page
9.3	Securing the Equipment	15
10.	AUTOMATIC SHUTDOWN OF MCC-A	15
10.1	Shutdown Investigation	16
10.2	Switching and Isolation Operations	16
11.	AUTOMATIC SHUTDOWN OF 5KV MOTOR STARTERS FOR PUMPS SJT-1, SJT-3, SJT-4, AND SJT-6	17
11.1	Shutdown Investigation	17
11.2	Switching and Isolation Operations	17
12.	RECORDS	18
Appendix A	One-Line Diagram	19
Appendix B	Elevation	20
Appendix C	Electrical Loads	22

1. INTRODUCTION.

Motor Control Center A (MCC-A) is located in the motor control center room of building 704. MCC-A is a 4160-volt, three-phase, three-wire system with a 2000-ampere bus. MCC-A is fed from a feeder breaker at the 5KV switchgear bus no. 1 (compartment 3) located in 5KV switchgear building no. 722. MCC-A is used to feed 480V MCC-1A via step-down transformer TX-1, 480V MCC-3 via step-down transformer TX-3, 480V MCC-4 via step-down transformer TX-4, and 4160V pumps SJT-1, SJT-3, SJT-4, and SJT-6. See Appendixes A, B, and C.

1.1 **Purpose.** This procedure provides step-by-step operations which shall be performed to safely and efficiently operate MCC-A.

1.2 **Scope.** This procedure provides directions to an authorized electrician for the performance of the following activities under normal conditions:

A. Start up MCC-A.

B. Start up 5KV motor starters for pumps SJT-1, SJT-3, SJT-4, and SJT-6.

C. Shut down 5KV motor starters for pumps SJT-1, SJT-3, SJT-4, and SJT-6.

D. Isolate 5KV motor starters for pumps SJT-1, SJT-3, SJT-4, and SJT-6.

E. Shut down MCC-A.

F. Isolate MCC-A.

G. Investigate an automatic shutdown of MCC-A.

H. Investigate an automatic shutdown of 5KV motor starters for pumps SJT-1, SJT-3, SJT-4, and SJT-6.

1.3 **Applicability.** The activities described in this procedure shall be performed by an authorized electrician at the request of the supervisor.

1.4 **Reference Documents.**

A. Block Diagram Power Distribution, drawing SJ-E-302-018.

B. One-Line Diagram Substation & 5KV Switchgear, drawing SJ-E-302-055.

C. One-Line Diagram 5KV MCC-A and MCC-B, drawing SJ-E-302-056.

D. Work package 005 00, 5KV Switchgear Bus No. 1.

2. PRECAUTIONS AND LIMITATIONS.

The following precautions and limitations apply to the operation of MCC-A:

A. All nonessential personnel shall maintain a minimum distance of 10 feet from MCC-A when power is first applied, until startup is complete.

B. Use of insulating gloves, protective body gowns, hooded face shields, and insulating floor mats are required during 5KV racking or switching operations.

C. A safety watch shall be stationed within view of the electrician performing 5KV switching operations.

D. The power source for MCC-A is 5KV switchgear bus no. 1. The nominal phase-to-phase voltage from this source is 4160 volts (4000 volts minimum).

3. PREREQUISITE ACTIONS.

The following prerequisite actions shall be accomplished prior to the operation of MCC-A:

A. Review the job safety analysis (JSA), if applicable, on this equipment for potential safety hazards and review associated one-line diagrams with the supervisor.

B. The supervisor shall verify that routine preventive maintenance has been performed on MCC-A and its components as described in the applicable maintenance requirement card (MRC).

C. The operations shift supervisor shall ensure all clearance orders (Safe Work Permits) associated with MCC-A have been issued.

D. Visually inspect MCC-A and 5KV switchgear bus no. 1 (compartment 3) for any evidence of moisture, rodents, or other signs of damage. Report same to supervisor.

E. Visually check for any temporary wiring, grounds, locks, or tags. All findings shall be reported to the control room operator and the supervisor.

F. Site operations personnel shall verify equipment status and install or remove locks and tags as necessary.

4. NORMAL STARTUP OPERATION OF MCC-A.

A normal startup operation is performed when 4160V power is applied to MCC-A from 5KV switchgear bus no. 1. The following steps shall be executed to complete MCC-A startup.

4.1 Startup Preparations.

[1] Obtain an electrical switching order (ESO) from the supervisor.

[2] Clear the area around MCC-A of all nonessential personnel until startup is complete.

[3] At MCC-A, verify that all circuits are off by visually checking the position of all contactors.

[4] At 5KV switchgear bus no. 1 (compartment 2), using the panel-mounted voltmeter, verify that phase-to-phase bus voltages are nominally 4160 volts. Report any phase-to-phase readings less than 4000 volts to the supervisor.

4.2 Switching Operations.

[1] Notify the control room operator that the MCC-A feeder breaker at 5KV switchgear bus no. 1 is being racked in.

WARNING

An electrical fault and flash could cause injury or death to personnel. Use of insulating gloves, protective body gowns, hooded face shields, and insulating floor mats are required when racking in 5KV circuit breakers.

[2] At 5KV switchgear bus no. 1 (compartment 3), rack in the MCC-A feeder breaker as follows:

[a] Open the compartment door.

[b] Push the breaker completely into the compartment.

[c] Mount the drive motor on the right side of the compartment.

[d] Place the drive motor toggle switch in the center position.

[e] Insert the drive motor electric plug into the receptacle on the right side of the compartment.

[f] Pull the lever on the right side of the compartment towards the drive motor.

[g] Place the drive motor toggle switch in the RAISE position and hold the lever until the breaker is in the fully raised position.

NOTE 1

If the drive motor does not operate, the manual crank handle stored in 5KV switchgear building 722 can be used to raise the breaker. Clockwise rotation raises the breaker.

NOTE 2

When the breaker is racked in, the breaker closing springs will be automatically compressed by a high speed gear electric motor located in the breaker mechanism.

[h] Release the lever and place the drive motor toggle switch in the center position.

[i] Withdraw the drive motor electric plug from the receptacle.

[j] Verify that the yellow CHGD flag is showing on the left side of the breaker.

[k] Remove the manual crank handle, if used, and close the compartment door.

[3] Verify that the green OPEN indicating light is on and the red CLOSE and white TRIP indicating lights are off.

[4] Verify that the following protective relays are reset:

[a] Phase overcurrent relays - 50/51 (3 places).

[b] Ground overcurrent relay - 51GS.

[c] Lockout relay - 86.

[5] Notify the control room operator that the MCC-A feeder breaker is being closed.

[6] Verify that the CAP TRIP #1 CHARGED indicating light or the CAP TRIP #2 CHARGED indicating light is on.

WARNING

An electrical fault and flash could cause injury or death to personnel. Use of insulating gloves, protective body gowns, hooded face shields, and insulating floor mats are required during 5KV switching operations.

[7] While standing on an insulating floor mat and to the hinged side of the compartment, turn the control switch to the CLOSE position. Return the control switch to the center position.

NOTE 1

If the control switch does not close the breaker, open the compartment door and manually close the breaker by pushing the MANUAL CLOSE.

NOTE 2

After closing, the high speed gear motor automatically recharges the closing springs.

4.3 Monitoring.

[1] At 5KV switchgear bus no. 1 (compartment 3), verify that the red CLOSE indicating light is on and the green OPEN and white TRIP indicating lights are off.

[2] Verify that the protective relays have not tripped.

[3] Using the panel-mounted ammeter, verify that there is no load on the MCC-A feeder breaker.

[4] At MCC-A (compartment 5FA), using the panel-mounted voltmeter, verify that phase-to-phase bus voltages are nominally 4160 volts.

[5] Using the panel-mounted ammeter, verify that there is no load on MCC-A.

NOTE

MCC-A is now energized and available for startup of other 5KV electrical equipment.

[6] Notify the control room operator that MCC-A is now energized.

5. NORMAL STARTUP OPERATION OF 5KV MOTOR STARTERS FOR PUMPS SJT-1, SJT-3, SJT-4, and SJT-6.

A normal startup operation is performed when 4160V power is applied to 5KV motor starters for pumps SJT-1, SJT-3, SJT-4, and SJT-6 from MCC-A. The following steps shall be executed to complete startup of 5KV motor starters for pumps SJT-1, SJT-3, SJT-4, and SJT-6.

5.1 Startup Preparations.

[1] Obtain an electrical switching order (ESO) from the supervisor to energize the 5KV motor starter for the selected pump.

[2] At MCC-A (compartment 5FA), using the panel-mounted voltmeter, verify that phase-to-phase bus voltages are nominally 4160 volts. Report any phase-to-phase readings less than 4000 volts to the supervisor.

[3] Clear the area around MCC-A of all nonessential personnel until startup is complete.

5.2 Switching Operations.

[1] Notify the control room operator that the 5KV motor starter at MCC-A for the selected pump is being energized.

WARNING

An electrical fault and flash could cause injury or death to personnel. Use of insulating gloves, protective body gowns, hooded face shields, and insulating floor mats are required when racking in 5KV motor starters.

[2] At MCC-A, energize the 5KV motor starter for the selected pump as follows:

[a] While standing on an insulating floor mat and to the hinged side of the compartment, depress the disconnect switch release mechanism and rotate the disconnect switch handle to the ON position.

[b] Verify that the protective relays have not tripped.

[c] Verify that the MOA switch is in the OFF position.

[d] Press the red RESET button.

[e] Verify that the green STOP indicating light is on.

5.3 Monitoring.

[1] At MCC-A, using the panel-mounted ammeter, verify that there is no load on the 5KV motor starter for the selected pump.

[2] Verify that the protective relays have not tripped.

[3] Verify that the green STOP indicating light is on.

NOTE

The 5KV motor starter for the selected pump is now energized.

[4] Notify the control room operator that the 5KV motor starter for the selected pump is now energized.

6. NORMAL SHUTDOWN OPERATION OF 5KV MOTOR STARTERS FOR PUMPS SJT-1, SJT-3, SJT-4, and SJT-6.

A normal shutdown operation is performed when 120/240VAC control power is removed from 5KV motor starters for pumps SJT-1, SJT-3, SJT-4, and SJT-6. The following steps shall be executed to complete shutdown of 5KV motor starters for pumps SJT-1, SJT-3, SJT-4, and SJT-6.

6.1 Shutdown Preparations.

[1] Obtain an electrical switching order (ESO) from the supervisor to shut down the 5KV motor starter for the selected pump.

[2] Clear the area around MCC-A of all nonessential personnel until shutdown is complete.

6.2 Switching Operations.

[1] Notify the control room operator that the 5KV motor starter for the selected pump is being de-energized.

WARNING

An electrical fault and flash could cause injury or death to personnel. Use of insulating gloves, protective body gowns, hooded face shields, and insulating floor mats are required during 5KV switching operations.

[2] At MCC-A, press the green STARTER LOCKOUT button for the selected pump.

[3] Verify that the green STOP indicating light is off.

6.3 Verification.

[1] At MCC-A, using the panel-mounted ammeter, verify that there is no load on the 5KV motor starter for the selected pump.

[2] Verify that the green STOP indicating light is off.

NOTE

5KV motor starter for the selected pump is now de-energized.

[3] Notify the control room operator that the 5KV motor starter for the selected pump is now de-energized.

7. ISOLATION PROCEDURE OF 5KV MOTOR STARTERS FOR PUMPS SJT-1, SJT-3, SJT-4, and SJT-6.

Isolation of 5KV motor starters for pumps SJT-1, SJT-3, SJT-4, and SJT-6 will prevent normal startup operation of 5KV motor starters for pumps SJT-1, SJT-3, SJT-4, and SJT-6. The following steps shall be executed only after the shutdown procedure of 5KV motor starters for pumps SJT-1, SJT-3, SJT-4, and SJT-6 (paragraph 6 above) are complete.

7.1 Coordination of Operations.

[1] Obtain an electrical switching order (ESO) from the supervisor to isolate the 5KV motor starter for the selected pump.

[2] Notify the control room operator that the 5KV motor starter for the selected pump is being isolated.

7.2 Switching Operations.

[1] At MCC-A, using the panel-mounted ammeter, verify that there is no load on the 5KV motor starter for the selected pump.

WARNING

An electrical fault and flash could cause injury or death to personnel. Use of insulating gloves, protective body gowns, hooded face shields, and insulating floor mats are required during 5KV switching operations.

[2] Press the green STARTER LOCKOUT button.

[3] Verify that the green STOP and red RUN indicating lights are off.

WARNING

An electrical fault and flash could cause injury or death to personnel. Use of insulating gloves, protective body gowns, hooded face shields, and insulating floor mats are required when racking out 5KV motor starters.

[4] Rack out the 5KV motor starter for the selected pump as follows:

[a] While standing on an insulating floor mat and to the hinged side of the compartment, depress the disconnect switch release mechanism and rotate the disconnect switch handle to the OFF position.

NOTE

Control power from LP-1 (MCC-1A compartment 6FC) is still present for the space heaters and blue indicating lights.

[5] Notify the control room operator that the 5KV motor starter for the selected pump is now isolated.

7.3 Securing the Equipment.

WARNING

Failure to lock out 5KV motor starters for pumps SJT-1, SJT-3, SJT-4, and SJT-6 will create a potential hazard for personnel performing maintenance.

[1] At MCC-A, attach a lock and tag to the disconnect switch release mechanism of the OFF disconnect switch for the selected pump.

[2] Log all locks and tags installed as part of the isolation procedure.

NOTE 1

The 5KV motor starter for the selected pump is now secured for maintenance.

NOTE 2

The number of each lock and tag as well as the name of the person who installed them shall be entered in the lockout/tagout log.

NOTE 3

A clearance order (Safe Work Permit) shall be obtained from the operations shift supervisor prior to start of work.

[3] Notify the control room operator that the 5KV motor starter for the selected pump is now secured for maintenance.

8. NORMAL SHUTDOWN OPERATION OF MCC-A.

A normal shutdown operation is performed when 4160V power is removed from MCC-A. The following steps shall be executed to complete MCC-A shutdown.

8.1 Shutdown Preparations.

[1] Obtain an electrical switching order (ESO) from the supervisor.

[2] Clear the area around MCC-A of all nonessential personnel until shutdown is complete.

[3] At MCC-A, verify that all circuits are off by visually checking the position of all contactors. Notify the supervisor of any remaining energized circuits.

8.2 Switching Operations.

[1] Notify the control room operator that MCC-A is being de-energized.

[2] At 5KV switchgear bus no. 1 (compartment 3), using the panel-mounted ammeter, verify that there is no load on the MCC-A feeder breaker.

[3] Verify that the CAP TRIP #1 CHARGED indicating light or the CAP TRIP #2 CHARGED indicating light is on.

WARNING

An electrical fault and flash could cause injury or death to personnel. Use of insulating gloves, protective body gowns, hooded face shields, and insulating floor mats are required during 5KV switching operations.

[4] While standing on an insulating floor mat and to the hinged side of the compartment, turn the control switch to the TRIP position. Return the control switch to the center position.

NOTE

If the control switch does not trip the breaker, open the compartment door and manually trip the breaker by pushing the MANUAL TRIP.

WARNING

120/240VAC control power is still present in each switchgear compartment.

8.3 Verification.

[1] At 5KV switchgear bus no. 1 (compartment 3), verify that the green OPEN indicating light is on and the red CLOSE and white TRIP indicating lights are off.

[2] Using the panel-mounted ammeter, verify that there is no load on the MCC-A feeder breaker.

[3] Open the compartment door and verify that the mechanical status indicator shows OPEN.

[4] Close the compartment door.

[5] At MCC-A (compartment 5FA), using the panel-mounted voltmeter, verify that phase-to-phase bus voltages are zero.

[6] Using the panel-mounted ammeter, verify that there is no load on MCC-A.

NOTE

MCC-A is now de-energized.

[7] Notify the control room operator that MCC-A is now de-energized.

9. ISOLATION PROCEDURE OF MCC-A.

Isolation of MCC-A will prevent normal startup operation of MCC-A. The following steps shall be executed only after MCC-A shutdown operation (paragraph 8 above) is complete.

9.1 Coordination of Operations.

[1] Obtain an electrical switching order (ESO) from the supervisor.

[2] Notify the control room operator that MCC-A is being isolated.

9.2 Switching Operations.

[1] At 5KV switchgear bus no. 1 (compartment 3), open the compartment door and verify that the mechanical status indicator shows OPEN.

WARNING

An electrical fault and flash could cause injury or death to personnel. Use of insulating gloves, protective body gowns, hooded face shields, and insulating floor mats are required when racking out 5KV circuit breakers.

[2] Rack out the MCC-A feeder breaker as follows:

[a] Open the compartment door.

[b] Mount the drive motor on the right side of the compartment.

[c] Place the drive motor toggle switch in the center position.

[d] Insert the drive motor electric plug into the receptacle on the right side of the compartment.

[e] Pull the lever on the right side of the compartment towards the drive motor.

[f] Place the drive motor toggle switch in the LOWER position and hold the lever until the breaker touches the floor of the compartment.

NOTE

If the drive motor does not operate, the manual crank handle stored in 5KV switchgear building 722 can be used to lower the breaker. Counterclockwise rotation lowers the breaker.

[g] Release the lever and place the drive motor toggle switch in the center position.

[h] Withdraw the drive motor electric plug from the receptacle.

[i] Remove the manual crank handle, if used, and close the compartment door.

NOTE 1
The green OPEN, red CLOSE, and white TRIP indicating lights should be off.

NOTE 2
MCC-A is now isolated.

[3] Notify the control room operator that MCC-A is now isolated.

9.3 Securing the Equipment.

WARNING

Failure to lock out the MCC-A feeder breaker at 5KV switchgear bus no. 1 (compartment 3) will create a potential hazard for personnel performing maintenance on MCC-A.

[1] At 5KV switchgear bus no. 1 (compartment 3), attach a lock and tag to the compartment door.

[2] Log all locks and tags installed as part of this isolation procedure.

NOTE 1
MCC-A is now secured for maintenance.

NOTE 2
The number of each lock and tag as well as the name of the person who installed them shall be entered in the lockout/tagout log.

NOTE 3
A clearance order (Safe Work Permit) shall be obtained from the operations shift supervisor prior to start of work.

[3] Notify the control room operator that MCC-A is now secured for maintenance.

10. AUTOMATIC SHUTDOWN OF MCC-A.

An automatic shutdown of MCC-A occurs when protective devices detect an abnormal condition and trip open the MCC-A feeder breaker at 5KV switchgear bus no. 1 (compartment 3). In the event of an automatic shutdown, the following steps shall be executed to assist maintenance personnel in determining the cause of the shutdown.

10.1 Shutdown Investigation.

[1] Notify the control room operator that MCC-A has automatically shut down and is being investigated.

WARNING

Due to the unknown nature or exact location of the condition which caused the automatic shutdown, all nonessential personnel shall stay clear of power distribution equipment associated with MCC-A.

[2] Clear the area around MCC-A and 5KV switchgear bus no. 1 of all nonessential personnel until isolation procedure is complete.

[3] Inspect the exterior of MCC-A and 5KV switchgear bus no. 1 for any signs of damage or conditions which may affect the system operation.

[4] At 5KV switchgear bus no. 1 (compartment 3), record the status of the following items:

[a] Lockout relay (86) - tripped or reset.

[b] Green, red, and white indicating lights - on or off.

[c] Protective relays - tripped or reset.

[d] Mechanical status indicator - open or closed.

[5] At MCC-A, record the status of the following items as applicable:

[a] Lockout relay (86) - tripped or reset.

[b] Green, red, amber, and blue indicating lights - on or off.

[c] Protective relays - tripped or reset.

[6] Obtain the data log from the DCS printout in the control room to establish time of shutdown.

10.2 Switching and Isolation Operations.

[1] If the MCC-A feeder breaker at 5KV switchgear bus no. 1 (compartment 3) has tripped open, then perform isolation procedure per paragraph 9 above.

[2] Report all findings and actions taken to the supervisor.

11. AUTOMATIC SHUTDOWN OF 5KV MOTOR STARTERS FOR PUMPS SJT-1, SJT-3, SJT-4, and SJT-6.

An automatic shutdown of 5KV motor starters for pumps SJT-1, SJT-3, SJT-4, and SJT-6 occurs when protective devices detect an abnormal condition and trip open 5KV motor starters for pumps SJT-1, SJT-3, SJT-4, and SJT-6 at MCC-A. In the event of an automatic shutdown, the following steps shall be executed to assist maintenance personnel in determining the cause of the shutdown.

11.1 Shutdown Investigation.

[1] Notify the control room operator that the 5KV motor starter for the selected pump has automatically shut down and is being investigated.

WARNING

Due to the unknown nature or exact location of the condition which caused the automatic shutdown, all nonessential personnel shall stay clear of power distribution equipment associated with the selected pump.

[2] Clear the area around MCC-A of all nonessential personnel until isolation procedures are complete.

[3] Inspect the exterior of MCC-A for any signs of damage or conditions which may affect the system operation.

[4] At MCC-A, record the status of the following items for the selected pump as applicable:

[a] Lockout relay (86) - tripped or reset.

[b] Green, red, and blue indicating lights - on or off.

[c] Protective relay - tripped or reset.

11.2 Switching and Isolation Operations.

[1] If the 5KV motor starter for pump SJT-1, SJT-3, SJT-4 or SJT-6 at MCC-A has tripped open, then perform isolation procedure per paragraph 7 above.

[2] Report all findings and actions taken to the supervisor.

12. RECORDS.

A. Any lock or tag attached to or removed from MCC-A or 5KV switchgear bus no. 1 (compartment 3) shall be entered in the lockout/tagout log.

B. Any findings of abnormal conditions shall be noted and reported to the control room operator, the supervisor, and the maintenance manager. A work request shall be initiated to correct the problem.

APPENDIX A

ONE-LINE DIAGRAM

MCC-A

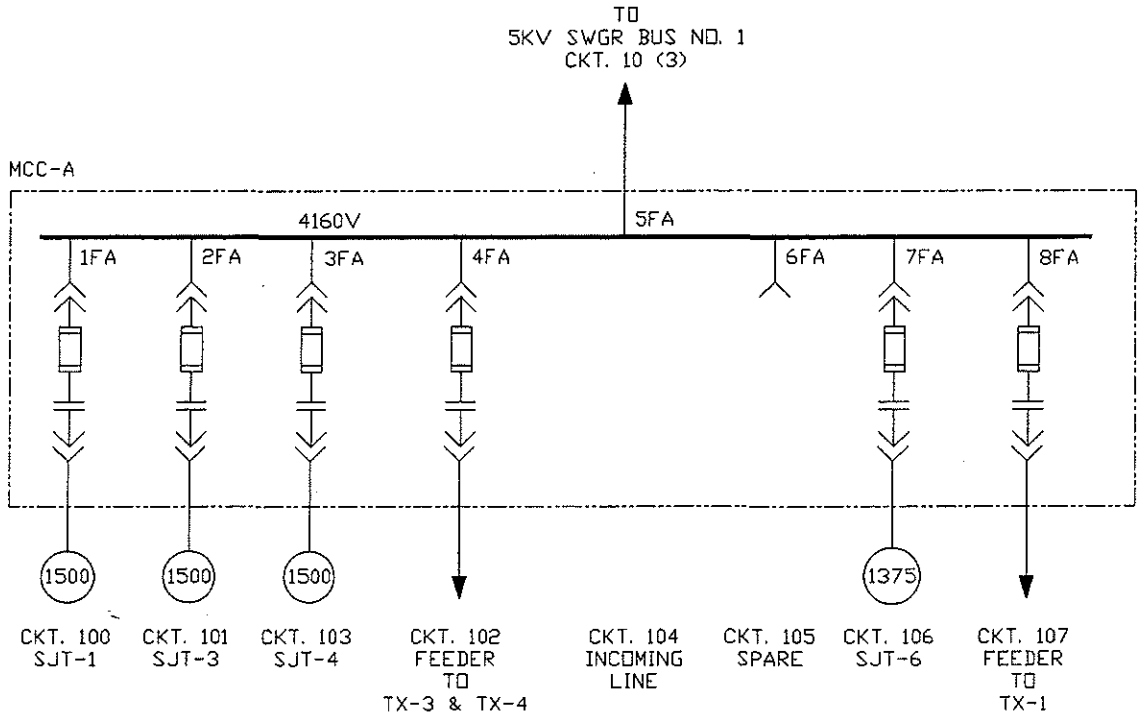

LEGEND:

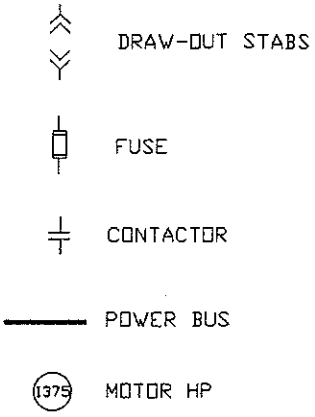

APPENDIX B

ELEVATIONS (Sheet 1 of 2)

MCC-A

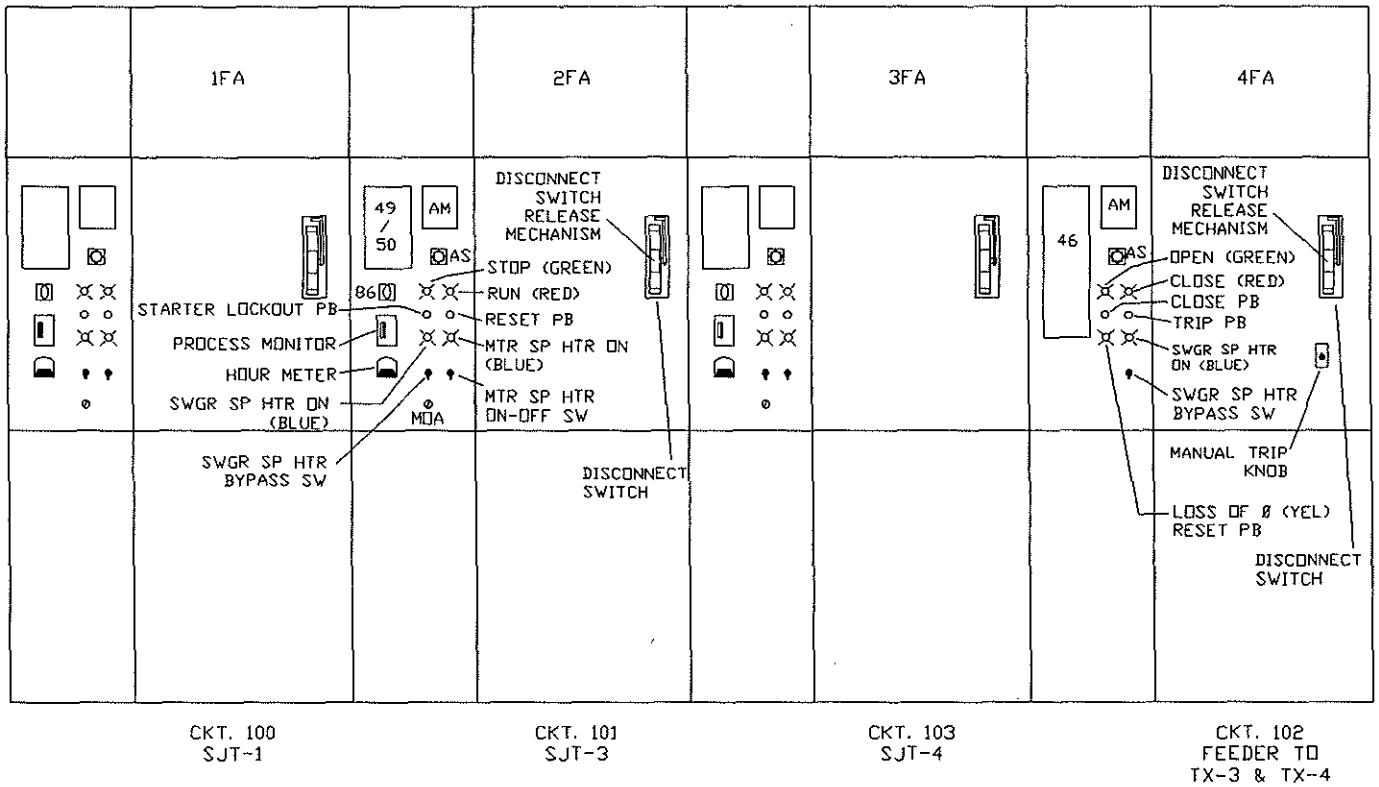

APPENDIX B

ELEVATIONS (Sheet 2)

MCC-A

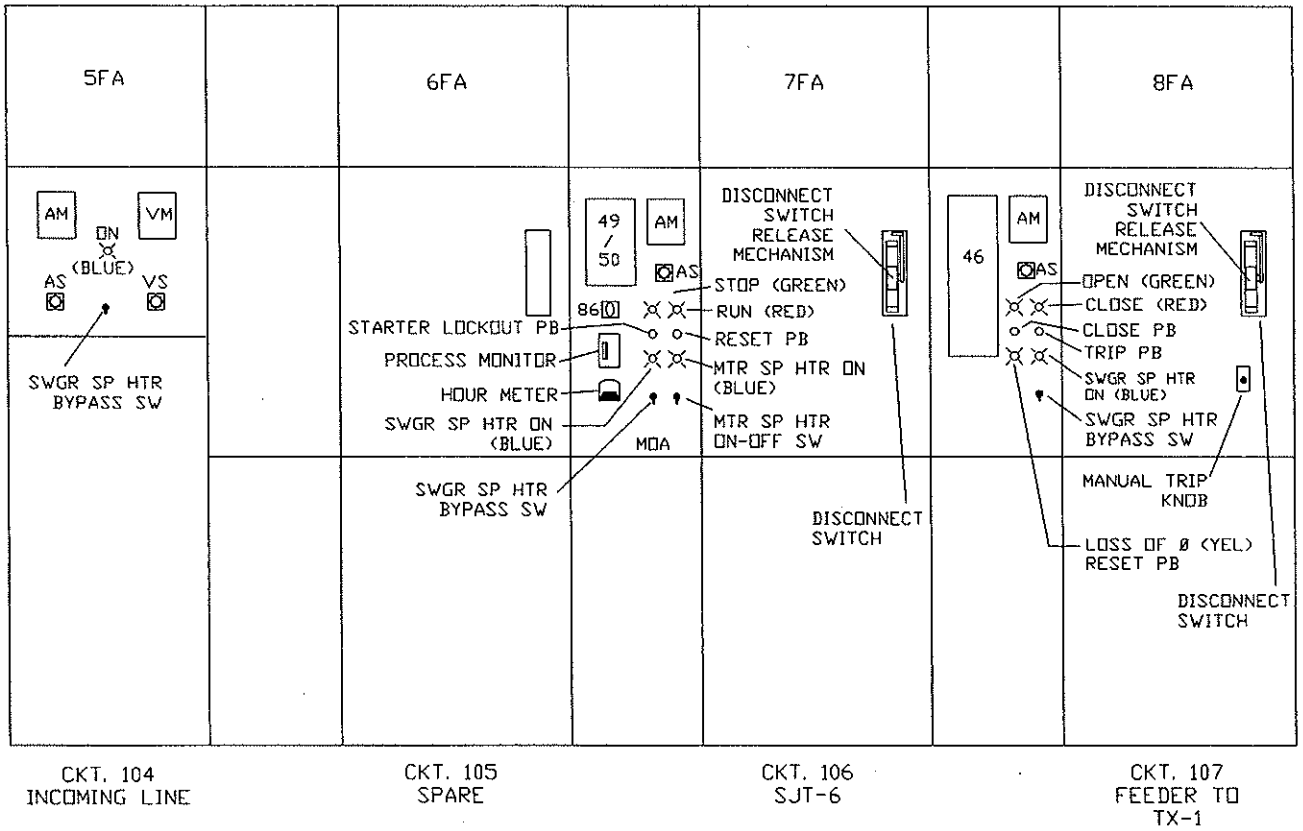

APPENDIX C

ELECTRICAL LOADS
(Sheet 1 of 3)

The following list of electrical loads are fed from MCC-A and will be affected by normal shutdown or automatic shutdown of MCC-A:

SJT-1 Booster pump.
SJT-3 Booster pump.
SJT-4 Booster pump.
SJT-6 Accelerated fill pump.
Motor Control Center 1A (MCC-1A) via 1000KVA transformer TX-1:
- MCC-1A/1B bus-tie breaker.
- DP-A Oil Q/A laboratory building distribution panel.
- Control building.
- Maintenance building.
- MOV-2D-20-W1.
- MOV-T520-2.
- MOV-T520-3.
- MOV-T620-4.
- MOV-2D-20-F1.
- MOV-T520-5.
- MOV-T520-4.
- Control Valve 1D-20-C.
- Control Valve 2D-20-C.
- MOV-120-D.
- MOV-220-D.
- MOV-320-D3.
- MOV-T420-3.
- Lift station no. 1.
- LP-1 Lighting panel.
- 15KVA transformer for LP-1.
- SJTP-21 Retention pond no. 2 sump pump.
- SJTP-22 Retention pond no. 2 sump pump.
- MOV-120-S.
- MOV-220-S.
- MOV-320-S1.
- MOV-320-S2.
- MOV-T420-2.
- MOV-T420-5.
- MOV-T420-4.
- MOV-T620-2.
- MOV-T620-3.
- MOV-T620-5.
- MOV-1D-20-F1.
- MOV-1D-20-W1.
- MOV-1D-20-F2.
- MOV-2D-20-F2.

APPENDIX C

ELECTRICAL LOADS
(Sheet 2)

Motor Control Center 3 (MCC-3) via 150KVA transformer TX-3:

MOV-BC-20-R1.
MOV-WI-20-R1.
MOV-WI-20-R2.
MOV-BC-20-R2.
MOV-WI-20-T.
MOV-BC-20-T.
Floodlights.
MOV-CL20-9.
LP-3 Lighting panel.
15KVA transformer for LP-3.
MOV-K20-BC2.
MOV-K20-BC1.
MOV-K20-BC3.

Motor Control Center 4 (MCC-4) via 750KVA transformer TX-4:

SJTP-101 Stripper pump for tank T-1.
SJTP-102 Stripper pump for tank T-2.
Streetlights.
Meter area floodlights.
MOV-BC-20-W2.
MOV-BC-20-F2.
MOV-CL20-2.
MOV-CL20-5.
MOV-K20-3.
MOV-K20-4
SJTP-23 Fire water jockey pump, main site.
ELT-2 Fire water pump house.
Bladder tank floodlights.
MOV-CL20-3.
Control valve WI-120-C.
LP-4 Lighting panel.
15KVA transformer for LP-4 lighting panel.
MOV-BCM120-1.
MOV-BCM120-2.
MOV-BCM120-P1.
MOV-WP20-K.
MOV-BCM220-1.
MOV-BCM220-2.
MOV-BCM220-P1.
MOV-BCM320-1.
MOV-BCM320-2.
MOV-BCM320-P1.
SJTP-19 Retention pond no. 1 sump pump.
Control valve BCM120-C.
Control valve BCM220-C.

APPENDIX C

ELECTRICAL LOADS
(Sheet 3)

Control valve BCM320-C.
SJTP-20 Retention pond no.1 sump pump.
MOV-BC-20-W3.
MOV-BC-20-F1.
MOV-WI-20-W1.
MOV-CL20-6.
MOV-WIM120-1.
MOV-WIM120-2.
MOV-WIM120-P1.
MOV-WP20-WI.
MOV-WIM220-1.
MOV-WIM220-2.
MOV-WIM220-P1.
MOV-WI-20-F2.
MOV-WIM320-1.
MOV-WIM320-P1.
MOV-WIM320-2.
MOV-WI-20-W2.
Control valve WIM120-C.
Control valve WIM220-C.
Control valve WIM320-C.
Control valve BC120-C.
MOV-WI-20-F1.
MOV-1720-D.
MOV-WI-20-F3.
MOV-1620-D.
MOV-1520-D.
MOV-1720-S.
MOV-1520-S.
MOV-1620-S.
Control valve WP20-C.
Temp pump floodlights.
SJT-110 Crude oil mixer for tank T-2.
SJT-111 Crude oil mixer for tank T-2.
SJT-112 Crude oil mixer for tank T-2.
SJT-107 Crude oil mixer for tank T-1.
SJT-108 Crude oil mixer for tank T-1.
SJT-109 Crude oil mixer for tank T-1.
Cathodic protection rectifier.

NORMAL OPERATING PROCEDURE

SAINT JAMES SITE

480V MOTOR CONTROL CENTER MCC-1A

NORMAL OPERATING PROCEDURE

SAINT JAMES SITE

480V MOTOR CONTROL CENTER MCC-1A

List of Effective Work Package Pages

Page No.	Chg. No.	Page No.	Chg. No.	Page No.	Chg. No.
1 thru 17	0	18(Blank)	0		

Record of Applicable Technical Directives

None

TABLE OF CONTENTS

Para.	Title	Page
1.	INTRODUCTION	3
1.1	Purpose	3
1.2	Scope	3
1.3	Applicability	3
1.4	Reference Documents	4
2.	PRECAUTIONS AND LIMITATIONS	4
3.	PREREQUISITE ACTIONS	4
4.	NORMAL STARTUP OPERATION OF MCC-1A	5
4.1	Startup Preparations	5
4.2	Switching Operations	6
4.3	Monitoring	6
5.	NORMAL SHUTDOWN OPERATION OF MCC-1A	7
5.1	Shutdown Preparations	7
5.2	Switching Operations	7
5.3	Verification	8
6.	ISOLATION PROCEDURE OF MCC-1A	8
6.1	Coordination of Operations	8
6.2	Switching Operations	8
6.3	Securing the Equipment	9
7.	AUTOMATIC SHUTDOWN OF MCC-1A	10
7.1	Shutdown Investigation	10
7.2	Switching and Isolation Operations	11
8.	RECORDS	12
Appendix A	MCC-1A One-Line Diagram	13
Appendix B	MCC-1A Front Elevation	15
Appendix C	MCC-1A Rear Elevation	16
Appendix D	Electrical Loads Associated with MCC-1A	17

1. INTRODUCTION.

Motor Control Center No. 1A (MCC-1A) is located in the motor control center room of building 704. MCC-1A is a 480/277-volt, three-phase, four-wire system with a 1600-ampere bus, and a 1600-ampere frame main breaker with a 1200-ampere trip. MCC-1A receives normal power from 5KV MCC-A (compartment 8FA) via step-down transformer TX-1. An alternate source of power is available from 480V MCC-1B via a normally open bus-tie breaker. MCC-1A is used to distribute 480-volt, three-phase power to 480-volt loads. See Appendixes A, B, C, and D.

The MCC-1A main breaker is equipped with a kirk key interlock system which prevents the MCC-1A main breaker, the MCC-1B main breaker, and the MCC-1A/1B bus-tie breaker from being closed, simultaneously. Only one main breaker may be closed while the bus-tie breaker is closed.

The MCC-1A main breaker is equipped with a shunt trip which trips the MCC-1A main breaker if the bus-tie breaker is closed, the emergency generator is running, and the automatic transfer switch transfers to emergency power. The MCC-1A bus will remain energized.

TX-1 is located outdoors at the southwest end of building 704. It is a 4160-480/277V, delta-wye, 1000KVA, step-down transformer.

1.1 Purpose. This procedure provides step-by-step operations which shall be performed to safely and efficiently operate MCC-1A.

1.2 Scope. This procedure provides directions to an authorized electrician for the performance of the following activities under normal conditions:

A. Start up MCC-1A and TX-1.

B. Shut down MCC-1A.

C. Isolate MCC-1A and TX-1.

D. Investigate an automatic shutdown of MCC-1A.

1.3 Applicability. The activities described in this procedure shall be performed by an authorized electrician at the request of the supervisor.

1.4 Reference Documents.

A. Block Diagram Power Distribution, drawing SJ-E-302-018.

B. One-Line Diagram 5KV MCC-A & MCC-B, drawing SJ-E-302-056.

C. One-Line Diagram 480V MCC-1A, drawing SJ-E-302-057.

D. Work package 007 00, 5KV Motor Control Center MCC-A.

E. Work package 018 00, 480V MCC-1A/MCC-1B Bus-Tie Breaker.

2. PRECAUTIONS AND LIMITATIONS.

The following precautions and limitations apply to the operation of MCC-1A and TX-1:

A. All nonessential personnel shall maintain a minimum distance of 10 feet from MCC-1A and TX-1 when power is first applied, until startup is complete.

B. Use of insulating gloves, protective body gowns, hooded face shields, and insulating floor mats are required during 5KV racking and switching operations.

C. A safety watch shall be stationed within view of the electrician performing 5KV switching operations.

D. The possible power sources for MCC-1A are MCC-A via TX-1 or MCC-1B through the MCC-1A/1B bus-tie breaker. The nominal phase-to-phase voltage from MCC-A is 4160 volts (4000V minimum) and 480 volts (460V to 510V acceptable) from TX-1 and MCC-1B.

E. If rain is imminent or is falling, the doors to the TX-1 enclosure shall remain closed to prevent water entry.

3. PREREQUISITE ACTIONS.

The following prerequisite actions shall be accomplished prior to the operation of MCC-1A and TX-1:

A. Review the job safety analysis (JSA), if applicable, on this equipment for potential safety hazards and review associated one-line diagrams with the supervisor.

B. The supervisor shall verify that routine preventive maintenance has been performed on MCC-1A, TX-1, and their components as described in the applicable maintenance requirement card (MRC).

C. The operations shift supervisor shall ensure all clearance orders (Safe Work Permits) associated with MCC-1A and TX-1 have been issued.

D. Visually inspect MCC-1A, TX-1, and MCC-A (compartment 8FA) for any evidence of moisture, rodents, or other signs of damage. Report same to supervisor.

E. Visually check for any temporary wiring, grounds, locks, or tags. All findings shall be reported to the control room operator and the supervisor.

F. Site operations personnel shall verify equipment status and install or remove locks and tags as necessary.

4. NORMAL STARTUP OPERATION OF MCC-1A.

A normal startup operation is performed when 480V power is applied to MCC-1A from MCC-A via TX-1. The following steps shall be executed to complete MCC-1A startup.

4.1 Startup Preparations.

[1] Obtain an electrical switching order (ESO) from the supervisor.

[2] Clear the area around MCC-1A, TX-1, and MCC-A of all nonessential personnel until startup is complete.

[3] At MCC-1 (compartment 7FA), verify that the MCC-1A main breaker status indicator shows OPEN.

[4] At compartment 8FA, verify that the MCC-1A/1B bus-tie breaker status indicator shows OPEN.

[5] At MCC-1A, verify that all branch circuit breakers are in the OFF position.

[6] At MCC-A (compartment 5FA), using the panel-mounted voltmeter, verify that phase-to-phase bus voltages are nominally 4160 volts. Report any phase-to-phase readings less than 4000 volts to the supervisor.

4.2 Switching Operations.

[1] Notify the control room operator that MCC-1A and TX-1 are being energized.

WARNING

An electrical fault and flash could cause injury or death to personnel. Use of insulating gloves, protective body gowns, hooded face shields, and insulating floor mats are required during 5KV racking and switching operations.

[2] At MCC-A (compartment 8FA), close the TX-1 feeder contactor as follows:

[a] While standing on an insulating floor mat and to the hinged side of the compartment, depress the disconnect switch release mechanism and rotate the disconnect switch handle to the ON position.

[b] Press the red CLOSE button.

[c] Verify that the red CLOSE indicating light is on.

[3] At MCC-1 (compartment 7FA), using the panel-mounted voltmeter, verify that phase-to-phase voltages are nominally 480 volts (460V to 510V acceptable).

NOTE
TX-1 is now energized.

[4] Notify the control room operator that TX-1 is now energized.

[5] At compartment 7FA, verify that the MCC-1A main breaker kirk key interlock is in the closed (key seized) position.

[6] Rotate the breaker charging handle counterclockwise 180 degrees and return to its center position. The charge status indicator will show CHARGED.

[7] Press the black CLOSE button.

4.3 Monitoring.

[1] At MCC-1 (compartment 7FA), using the panel-mounted voltmeter, verify that phase-to-phase bus voltages are nominally 480 volts (460V to 510V acceptable).

[2] Verify that the MCC-1A main breaker status indicator shows CLOSED and the charge status indicator shows DISCHARGED.

[3] Using the panel-mounted ammeter, verify that there is no load on MCC-1A.

NOTE
MCC-1A is now energized and available for startup of other 480V equipment.

[4] Notify the control room operator that MCC-1A is now energized.

[5] If required, close the MCC-1A/1B bus-tie breaker per work package 018 00.

5. NORMAL SHUTDOWN OPERATION OF MCC-1A.

A normal shutdown operation is performed when 480V power is removed from MCC-1A. The following steps shall be executed to complete MCC-1A shutdown.

NOTE
TX-1 will remain energized.

5.1 Shutdown Preparations.

[1] Obtain an electrical switching order (ESO) from the supervisor.

[2] Clear the area around MCC-1A of all nonessential personnel until shutdown is complete.

[3] At MCC-1 (compartment 8FA), verify that the MCC-1A/1B bus-tie breaker status indicator shows OPEN.

[4] At MCC-1A, verify that all branch circuits are de-energized by visually checking the position of all branch circuit breakers. Notify the supervisor of any remaining energized circuits.

5.2 Switching Operations.

[1] Notify the control room operator that MCC-1A is being de-energized.

[2] At MCC-1 (compartment 7FA), using the panel-mounted ammeter, verify that there is no load on MCC-1A.

[3] Press the red TRIP button.

5.3 Verification.

[1] At MCC-1 (compartment 7FA), verify that the MCC-1A main breaker status indicator shows OPEN.

NOTE
MCC-1A is now de-energized.

[2] Notify the control room operator that MCC-1A is now de-energized.

6. ISOLATION PROCEDURE OF MCC-1A.

Isolation of MCC-1A and TX-1 will prevent normal startup operation of MCC-1A and TX-1. The following steps shall be executed only after MCC-1A shutdown operation (paragraph 5 above) is complete.

6.1 Coordination of Operations.

[1] Obtain an electrical switching order (ESO) from the supervisor.

[2] Notify the control room operator that MCC-1A and TX-1 are being isolated.

6.2 Switching Operations.

[1] At MCC-A (compartment 8FA), using the panel-mounted ammeter, verify that there is no load on the TX-1 feeder contactor.

WARNING

An electrical fault and flash could cause injury or death to personnel. Use of insulating gloves, protective body gowns, hooded face shields, and insulating floor mats are required during 5KV switching operations.

[2] Trip the TX-1 feeder contactor by pushing the green TRIP button.

NOTE
If the TRIP button does not open the TX-1 feeder contactor, manually open the contactor by pulling the manual trip knob.

[3] Verify that the green OPEN and amber LOSS OF PHASE indicating lights are on and the red CLOSE indicating light is off.

WARNING

An electrical fault and flash could cause injury or death to personnel. Use of insulating gloves, protective body gowns, hooded face shields, and insulating floor mats are required when racking out 5KV contactors.

[4] Rack out the TX-1 feeder contactor as follows:

[a] While standing on an insulating floor mat and to the hinged side of the compartment, depress the disconnect switch release mechanism and rotate the disconnect switch handle to the OFF position.

[b] Verify that all indicating lights are off.

[5] At MCC-1 (compartment 7FA), using the panel-mounted voltmeter, verify that phase-to-phase voltages are zero.

NOTE

MCC-1A and TX-1 are now isolated.

[6] Notify the control room operator that MCC-1A and TX-1 are now isolated.

6.3 Securing the Equipment.

WARNING

Failure to lock out the TX-1 feeder contactor and the MCC-1A main breaker will create a potential hazard for personnel performing maintenance on MCC-1A and TX-1.

[1] At MCC-A (compartment 8FA), attach a lock and tag to the disconnect switch release mechanism of the OFF disconnect switch.

[2] At MCC-1 (compartment 7FA), remove the kirk key from the interlock of the MCC-1A main breaker.

[3] Depress the red TRIP button and attach a lock and tag to the OPEN MCC-1A main breaker.

[4] At compartment 8FA, remove the kirk key, if applicable, from the interlock of the MCC-1A/1B bus-tie breaker.

[5] Depress the red TRIP button and attach a lock and tag to the OPEN MCC-1A/1B bus-tie breaker.

[6] Log all locks and tags installed as part of the isolation procedure.

NOTE 1
MCC-1A and TX-1 are now secured for maintenance.

NOTE 2
The number of each lock and tag as well as the name of the person who installed them shall be entered in the lockout/tagout log.

NOTE 3
A clearance order (Safe Work Permit) shall be obtained from the operations shift supervisor prior to start of work.

[7] Notify the control room operator that MCC-1A and TX-1 are now secured for maintenance.

7. AUTOMATIC SHUTDOWN OF MCC-1A.

An automatic shutdown of MCC-1A occurs when protective devices detect an abnormal condition and trip open the TX-1 feeder contactor or the MCC-1A main breaker. In the event of an automatic shutdown, the following steps shall be executed to assist maintenance personnel in determining the cause of the shutdown.

7.1 Shutdown Investigation.

[1] Notify the control room operator that MCC-1A has automatically shutdown and is being investigated.

WARNING

Due to the unknown nature or exact location of the condition which caused the automatic shutdown, all nonessential personnel shall stay clear of power distribution equipment associated with MCC-1A and TX-1.

[2] Clear the area around MCC-1A and TX-1 of all nonessential personnel until isolation procedure is complete.

[3] Inspect the exterior of MCC-1A, TX-1, and MCC-A (compartment 8FA) for any signs of damage or conditions which may affect the system operation.

[4] At MCC-1A, record the status of the following items:

[a] Main breaker - open or closed.

[b] Phase-to-phase voltages on the panel-mounted voltmeter.

[c] All branch circuit breakers that have tripped.

[d] Ammeter readings for all phases.

[5] At MCC-1 (compartment 8FA), record the status of the MCC-1A/1B bus-tie breaker - open or closed.

[6] At MCC-A (compartment 8FA), record the status of the following items:

[a] Red, green, amber, and blue indicating lights - on or off.

[b] Ammeter readings for all phases.

[c] Loss of phase relay 46 - tripped or reset.

7.2 Switching and Isolation Operations.

[1] If the MCC-1A main breaker and TX-1 feeder contactor have both tripped open, then isolate per paragraph 6 above.

[2] If only the MCC-1A main breaker has tripped open, then isolate as follows:

[a] At MCC-1 (compartment 7FA), remove the kirk key from the interlock of the MCC-1A main breaker.

[b] Depress the red TRIP button and attach a lock and tag to the MCC-1A main breaker.

[c] Enter the lock and tag into the lockout/tagout log.

[3] If the MCC-1A main breaker is still closed, but the TX-1 feeder contactor at MCC-A has tripped open, then isolate per paragraph 6 above.

[4] Report all findings and actions taken to the supervisor.

8. RECORDS.

A. Any locks or tags attached to or removed from MCC-1A or MCC-A shall be entered in the lockout/tagout log.

B. Any findings of abnormal conditions shall be noted and reported to the control room operator, the supervisor, and the maintenance manager. A work request shall be initiated to correct the problem.

APPENDIX A

MCC-1A ONE-LINE DIAGRAM
(Sheet 1 of 2)

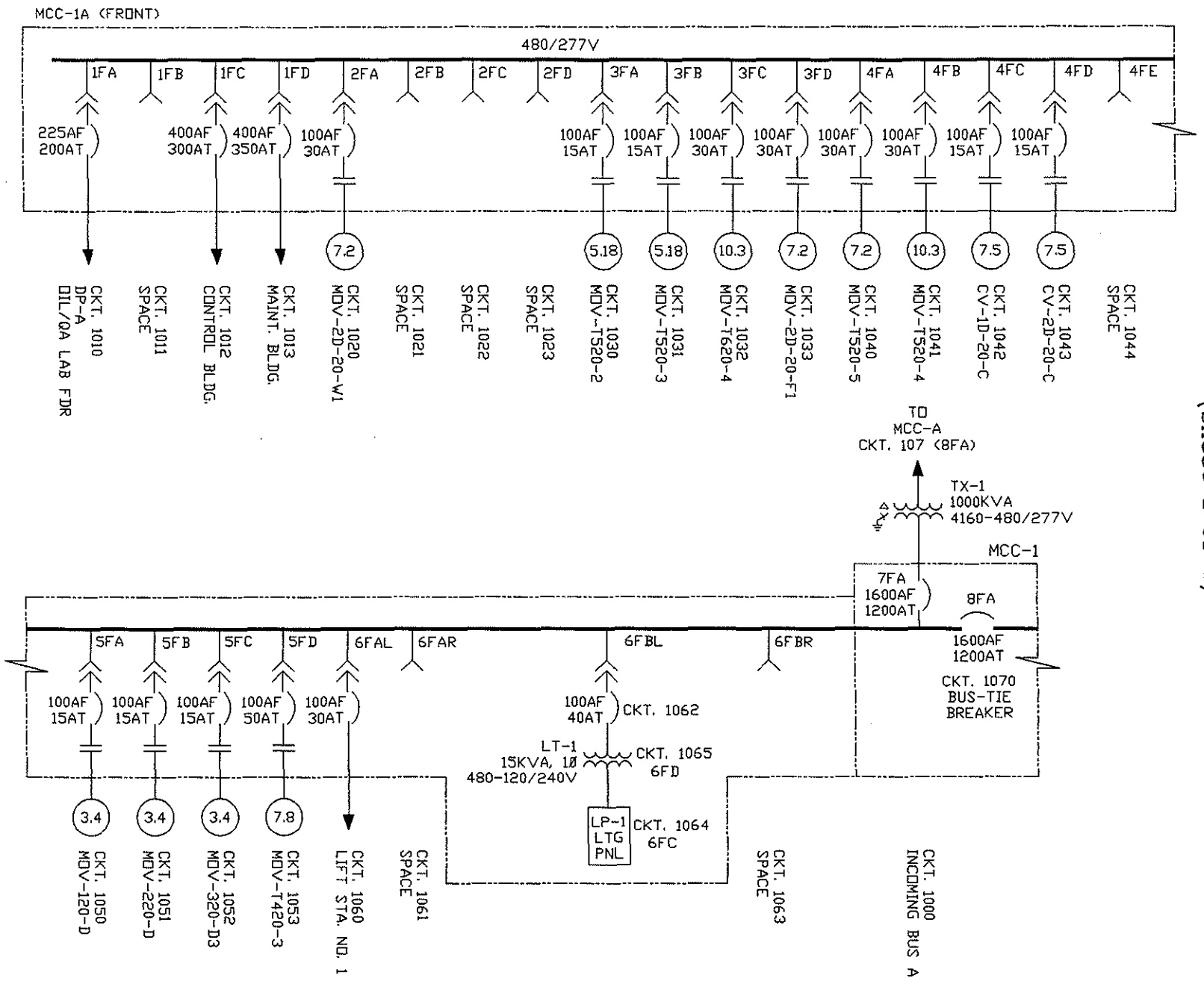

APPENDIX A

MCC-1A ONE-LINE DIAGRAM
(Sheet 2)

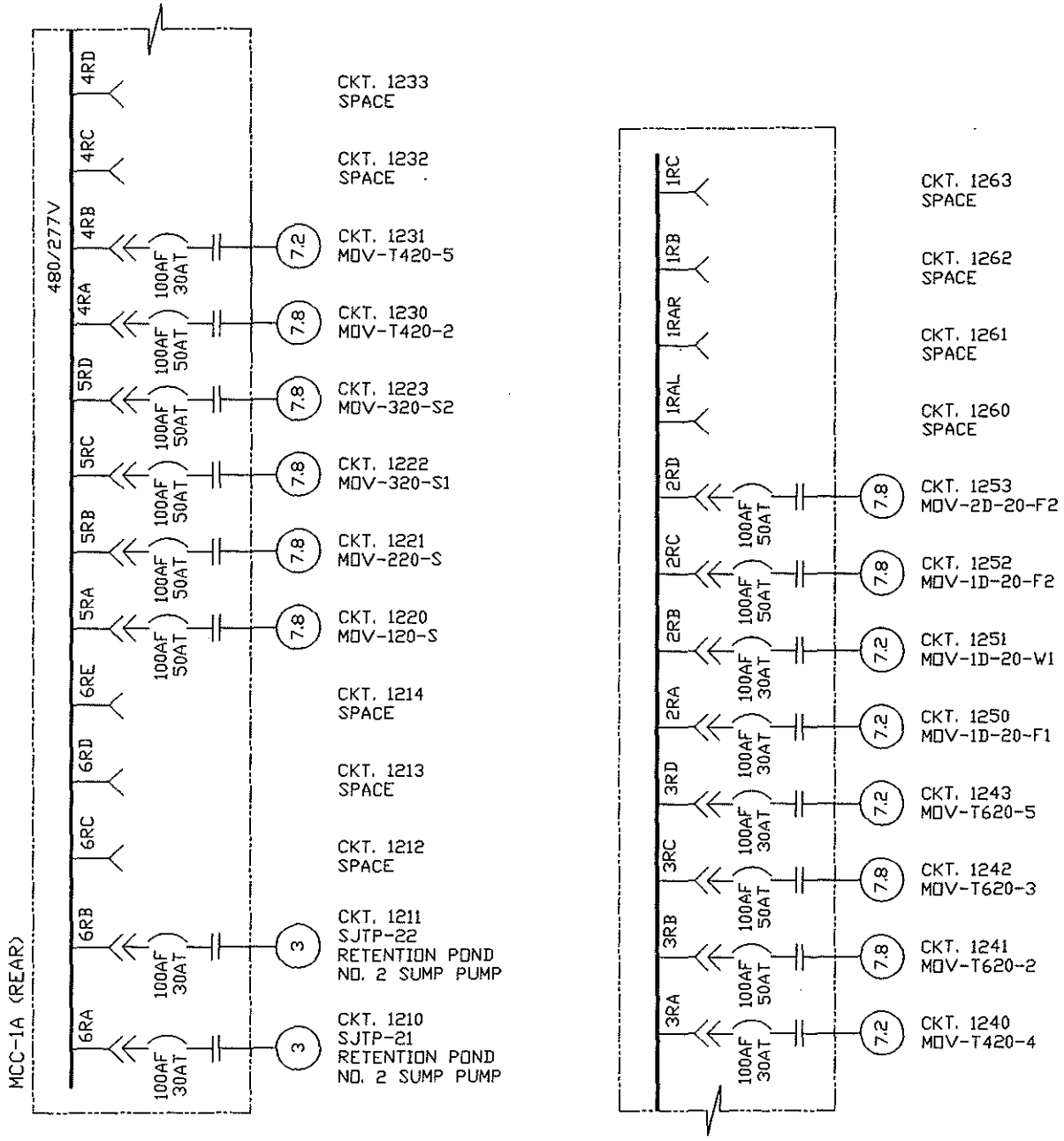

APPENDIX B

MCC-1A FRONT ELEVATION

1F	2F	3F	4F	5F	6F	
CKT. 1010 DP-A OIL/QA LAB FDR 1FA	CKT. 1020 MOV-2D-20-W1 2FA	CKT. 1030 MOV-T520-2 3FA	CKT. 1040 MOV-T520-5 4FA	CKT. 1050 MOV-120-D 5FA	CKT. 1060 LIFT STA. NO. 1 6FAL	CKT. 1061 SPACE 6FAR
CKT. 1011 SPACE 1FB	CKT. 1021 SPACE 2FB	CKT. 1031 MOV-T520-3 3FB	CKT. 1041 MOV-T520-4 4FB	CKT. 1051 MOV-220-D 5FB	CKT. 1062 FEEDER TO XFMR LT-1 6FBL	CKT. 1063 SPACE 6FBR
CKT. 1012 CONTROL BLDG. 1FC	CKT. 1022 SPACE 2FC	CKT. 1032 MOV-T620-4 3FC	CKT. 1042 CV-1D-20-C 4FC	CKT. 1052 MOV-320-D3 5FC	CKT. 1064 LP-1 LIGHTING PANEL 6FC	
CKT. 1013 MAINT. BLDG. 1FD	CKT. 1023 SPACE 2FD	CKT. 1033 MOV-2D-20-F1 3FD	CKT. 1043 CV-2D-20-C 4FD CKT. 1044 SPACE 4FE	CKT. 1053 MOV-T420-3 5FD	CKT. 1065 LT-1 15KVA TRANSFORMER FOR LP-1 LIGHTING PANEL 6FD	

APPENDIX C

MCC-1A REAR ELEVATION

6R	5R	4R	3R	2R	1R
CKT. 1210 SJTP-21 RETENTION POND NO. 2 SUMP PUMP 6RA	CKT. 1220 MOV-120-S 5RA	CKT. 1230 MOV-T420-2 4RA	CKT. 1240 MOV-T420-4 3RA	CKT. 1250 MOV-1D-20-F1 2RA	CKT. 1260 SPACE 1RAL; CKT. 1261 SPACE 1RAR
CKT. 1211 SJTP-22 RETENTION POND NO. 2 SUMP PUMP 6RB					CKT. 1262 SPACE 1RB
CKT. 1212 SPACE 6RC	CKT. 1221 MOV-220-S 5RB	CKT. 1231 MOV-T420-5 4RB	CKT. 1241 MOV-T620-2 3RB	CKT. 1251 MOV-1D-20-W1 2RB	CKT. 1263 SPACE 1RC
CKT. 1213 SPACE 6RD	CKT. 1222 MOV-320-S1 5RC	CKT. 1232 SPACE 4RC	CKT. 1242 MOV-T620-3 3RC	CKT. 1252 MOV-1D-20-F2 2RC	
CKT. 1214 SPACE 6RE	CKT. 1223 MOV-320-S2 5RD	CKT. 1233 SPACE 4RD	CKT. 1243 MOV-T620-5 3RD	CKT. 1253 MOV-2D-20-F2 2RD	

APPENDIX D

ELECTRICAL LOADS ASSOCIATED WITH MCC-1A

The following list of electrical loads are fed from MCC-1A and will be affected by normal shutdown or automatic shutdown of MCC-1A:

MCC-1A/1B bus-tie breaker.
DP-A Oil Q/A laboratory building distribution panel.
Control building.
Maintenance building.
MOV-2D-20-W1.
MOV-T520-2.
MOV-T520-3.
MOV-T620-4.
MOV-2D-20-F1.
MOV-T520-5.
MOV-T520-4.
Control Valve 1D-20-C.
Control Valve 2D-20-C.
MOV-120-D.
MOV-220-D.
MOV-320-D3.
MOV-T420-3.
Lift station no. 1.
LP-1 Lighting panel.
15KVA transformer for LP-1.
SJTP-21 Retention pond no. 2 sump pump.
SJTP-22 Retention pond no. 2 sump pump.
MOV-120-S.
MOV-220-S.
MOV-320-S1.
MOV-320-S2.
MOV-T420-2.
MOV-T420-5.
MOV-T420-4.
MOV-T620-2.
MOV-T620-3.
MOV-T620-5.
MOV-1D-20-F1.
MOV-1D-20-W1.
MOV-1D-20-F2.
MOV-2D-20-F2.

NORMAL OPERATING PROCEDURE

SAINT JAMES SITE

480V MOTOR CONTROL CENTER MCC-3

NORMAL OPERATING PROCEDURE

SAINT JAMES SITE

480V MOTOR CONTROL CENTER MCC-3

List of Effective Work Package Pages

Page No.	Chg. No.	Page No.	Chg. No.	Page No.	Chg. No.
1 thru 14	0				

Record of Applicable Technical Directives

None

TABLE OF CONTENTS

Para.	Title	Page
1.	INTRODUCTION	3
1.1	Purpose	3
1.2	Scope	3
1.3	Applicability	3
1.4	Reference Documents	3
2.	PRECAUTIONS AND LIMITATIONS	4
3.	PREREQUISITE ACTIONS	4
4.	NORMAL STARTUP OPERATION OF MCC-3	5
4.1	Startup Preparations	5
4.2	Switching Operations	5
4.3	Monitoring	6
5.	NORMAL SHUTDOWN OPERATION OF MCC-3	6
5.1	Shutdown Preparations	6
5.2	Switching Operations	7
5.3	Verification	7
6.	ISOLATION PROCEDURE OF MCC-3	7
6.1	Coordination of Operations	7
6.2	Switching Operations	7
6.3	Securing the Equipment	9
7.	AUTOMATIC SHUTDOWN OF MCC-3	10
7.1	Shutdown Investigation	10
7.2	Switching and Isolation Operations	11
8.	RECORDS	11
Appendix A	MCC-3 One-Line Diagram	12
Appendix B	MCC-3 Front Elevation	13
Appendix C	Electrical Loads Associated with MCC-3	14

1. INTRODUCTION.

Motor Control Center No. 3 (MCC-3) is located outdoors in a NEMA type 3R rainproof enclosure south of the water treatment area. MCC-3 is a 480-volt, three-phase, three-wire system with a 600-ampere bus, 400-ampere frame main breaker with a 200-ampere trip. MCC-3 is fed from 5KV MCC-A (compartment 4FA) via step-down transformer TX-3. MCC-3 is used to distribute 480-volt, three-phase power to miscellaneous 480-volt loads. See Appendixes A, B, and C.

TX-3 is located outdoors by MCC-3. TX-3 is a 4160-480V, delta-wye, 150KVA, step-down transformer with a fused 600-ampere load break disconnect switch on the primary side.

1.1 Purpose. This procedure provides step-by-step operations which shall be performed to safely and efficiently operate MCC-3.

1.2 Scope. This procedure provides directions to an authorized electrician for the performance of the following activities under normal conditions:

A. Start up MCC-3 and TX-3.

B. Shut down MCC-3.

C. Isolate MCC-3 and TX-3.

D. Investigate an automatic shutdown of MCC-3.

1.3 Applicability. The activities described in this procedure shall be performed by an authorized electrician at the request of the supervisor.

1.4 Reference Documents.

A. Block Diagram Power Distribution, drawing SJ-E-302-018.

B. One-Line Diagram 5KV MCC-A & MCC-B, drawing SJ-E-302-056.

C. One-Line Diagram 480V MCC-2, MCC-3 & 3E, drawing SJ-E-302-059.

D. Work package 007 00, 5KV Motor Control Center MCC-A.

E. Work package 010 00, 480V Motor Control Center MCC-4.

2. PRECAUTIONS AND LIMITATIONS.

The following precautions and limitations apply to the operation of MCC-3 and TX-3:

A. All nonessential personnel shall maintain a minimum distance of 10 feet from MCC-3 and TX-3 when power is first applied, until startup is complete.

B. Use of insulating gloves, protective body gowns, hooded face shields, and insulating floor mats are required during 5KV racking and switching operations.

C. A safety watch shall be stationed within view of the electrician performing 5KV switching operations.

D. The power source for MCC-3 is MCC-A via TX-3. The nominal phase-to-phase voltage from MCC-A is 4160 volts (4000V minimum) and 480 volts (460V to 510V acceptable) from TX-3.

E. If rain is imminent or is falling, the doors to the MCC-3 and TX-3 enclosures shall remain closed to prevent water entry.

3. PREREQUISITE ACTIONS.

The following prerequisite actions shall be accomplished prior to the operation of MCC-3 and TX-3:

A. Review the job safety analysis (JSA), if applicable, on this equipment for potential safety hazards and review associated one-line diagrams with the supervisor.

B. The supervisor shall verify that routine preventive maintenance has been performed on MCC-3, TX-3, and their components as described in the applicable maintenance requirement card (MRC).

C. The operations shift supervisor shall ensure all clearance orders (Safe Work Permits) associated with MCC-3 have been issued.

D. Visually inspect MCC-3, TX-3, and MCC-A (compartment 4FA) for any evidence of moisture, rodents, or other signs of damage. Report same to supervisor.

E. Visually check for any temporary wiring, grounds, locks, or tags. All findings shall be reported to the control room operator and the supervisor.

F. Site operations personnel shall verify equipment status and install or remove locks and tags as necessary.

4. NORMAL STARTUP OPERATION OF MCC-3.

A normal startup operation is performed when 480V power is applied to MCC-3 from MCC-A via TX-3. The following steps shall be executed to complete MCC-3 startup.

4.1 Startup Preparations.

[1] Obtain an electrical switching order (ESO) from the supervisor.

[2] Clear the area around MCC-3 and TX-3 of all nonessential personnel until startup is complete.

[3] At MCC-3, verify that all circuit breakers are in the OFF position.

[4] At TX-3, verify that the load break disconnect switch is in the closed position.

[5] At MCC-A (compartment 5FA), using the panel-mounted voltmeter, verify that phase-to-phase bus voltages are nominally 4160 volts. Report any phase-to-phase readings less than 4000 volts to the supervisor.

4.2 Switching Operations.

[1] Notify the control room operator that MCC-3 and TX-3 are being energized.

WARNING 1

Closing the TX-3 & 4 feeder contactor at MCC-A (compartment 4FA) will supply 4160 volts to the primary side of the load break disconnect switch for TX-4.

WARNING 2

An electrical fault and flash could cause injury or death to personnel. Use of insulating gloves, protective body gowns, hooded face shields, and insulating floor mats are required during 5KV racking and switching operations.

[2] At MCC-A (compartment 4FA), close the TX-3 & 4 feeder contactor as follows:

[a] While standing on an insulating floor mat and to the hinged side of the compartment, depress the disconnect switch release mechanism and rotate the disconnect switch handle to the ON position.

[b] Press the red CLOSE button.

[c] Verify that the red CLOSE indicating light is on.

[3] At MCC-3 (compartment 2FA), using the panel-mounted voltmeter, verify that phase-to-phase voltages are nominally 480 volts (460V to 510V acceptable).

NOTE
TX-3 is now energized.

[4] Notify the control room operator that TX-3 is now energized.

[5] At MCC-3 (compartment 2FC), turn the handle of the MCC-3 main breaker to the ON position.

4.3 Monitoring.

[1] At MCC-3 (compartment 2FA), using the panel-mounted voltmeter, verify that phase-to-phase bus voltages are nominally 480 volts (460V to 510V acceptable).

[2] Using the panel-mounted ammeter, verify that there is no load on MCC-3.

NOTE
MCC-3 is now energized and available for startup of other 480V equipment.

[3] Notify the control room operator that MCC-3 is now energized.

5. NORMAL SHUTDOWN OPERATION OF MCC-3.

A normal shutdown operation is performed when 480V power is removed from MCC-3. The following steps shall be executed to complete MCC-3 shutdown.

NOTE
TX-3 will remain energized.

5.1 Shutdown Preparations.

[1] Obtain an electrical switching order (ESO) from the supervisor.

[2] Clear the area around MCC-3 of all nonessential personnel until shutdown is complete.

[3] At MCC-3, verify that all branch circuits are de-energized by visually checking the position of all branch circuit breakers. Notify the supervisor of any remaining energized circuits.

5.2 Switching Operations.

[1] Notify the control room operator that MCC-3 is being de-energized.

[2] At MCC-3 (compartment 2FA), using the panel-mounted ammeter, verify that there is no load on MCC-3.

[3] At compartment 2FC, turn the handle of the MCC-3 main breaker to the OFF position.

5.3 Verification.

[1] At MCC-3 (compartment 2FA), using the panel-mounted ammeter, verify that there is no load on MCC-3.

NOTE
MCC-3 is now de-energized.

[2] Notify the control room operator that MCC-3 is now de-energized.

6. ISOLATION PROCEDURE OF MCC-3.

Isolation of MCC-3 and TX-3 will prevent normal startup operation of MCC-3 and TX-3. The following steps shall be executed only after MCC-3 shutdown operation (paragraph 5 above) is complete.

6.1 Coordination of Operations.

[1] Obtain an electrical switching order (ESO) from the supervisor.

[2] Notify the control room operator that MCC-3 and TX-3 are being isolated.

6.2 Switching Operations.

[1] Shut down MCC-4 per work package 010 00.

[2] At MCC-A (compartment 4FA), using the panel-mounted ammeter, verify that there is no load on the TX-3 & 4 feeder contactor.

NOTE

Tripping the TX-3 & 4 feeder contactor at compartment 4FA will de-energize both TX-3 and TX-4.

WARNING

An electrical fault and flash could cause injury or death to personnel. Use of insulating gloves, protective body gowns, hooded face shields, and insulating floor mats are required during 5KV switching operations.

[2] Trip the TX-3 & 4 feeder contactor by pushing the green TRIP button.

NOTE

If the TRIP button does not open the TX-3 & 4 feeder contactor, manually open the contactor by pulling the manual trip knob.

[3] Verify that the green OPEN and amber LOSS OF PHASE indicating lights are on and the red CLOSE indicating light is off.

WARNING

An electrical fault and flash could cause injury or death to personnel. Use of insulating gloves, protective body gowns, hooded face shields, and insulating floor mats are required when racking out 5KV contactors.

[4] Rack out the TX-3 & 4 feeder contactor as follows:

[a] While standing on an insulating floor mat and to the hinged side of the compartment, depress the disconnect switch release mechanism and rotate the disconnect switch handle to the OFF position.

[b] Verify that the red CLOSE, green OPEN, and amber LOSS OF PHASE indicating lights are off.

NOTE

Control power from LP-1 (MCC-1A compartment 6FC) is still present for the space heater and blue indicating light.

[5] At MCC-3 (compartment 2FA), using the panel-mounted voltmeter, verify that phase-to-phase voltages are zero.

[6] At TX-3, rotate the load break disconnect switch to the OPEN position.

[7] Verify that the TX-3 load break disconnect switch indicator shows OP.

NOTE
MCC-3 and TX-3 are now isolated.

[8] Notify the control room operator that MCC-3 and TX-3 are now isolated.

6.3 Securing the Equipment.

WARNING

Failure to lock out the TX-3 & 4 feeder contactor at MCC-A (compartment 4FA) and the MCC-3 main breaker at MCC-3 will create a potential hazard for personnel performing maintenance on MCC-3 and TX-3.

[1] At MCC-A (compartment 4FA), attach a lock and tag to the disconnect switch release mechanism of the OFF disconnect switch.

[2] At MCC-3 (compartment 2FC), attach a lock and tag to the handle of the OFF MCC-3 main breaker.

[3] Log all locks and tags installed as part of the isolation procedure.

NOTE 1
MCC-3 and TX-3 are now secured for maintenance.

NOTE 2
The number of each lock and tag as well as the name of the person who installed them shall be entered in the lockout/tagout log.

NOTE 3
A clearance order (Safe Work Permit) shall be obtained from the operations shift supervisor prior to start of work.

[4] Notify the control room operator that MCC-3 and TX-3 are now secured for maintenance.

7. AUTOMATIC SHUTDOWN OF MCC-3.

An automatic shutdown of MCC-3 occurs when protective devices detect an abnormal condition and trip open the TX-3 & 4 feeder contactor, the MCC-3 main breaker, or the fuses for the TX-3 load break disconnect switch are blown open. In the event of an automatic shutdown, the following steps shall be executed to assist maintenance personnel in determining the cause of the shutdown.

7.1 Shutdown Investigation.

[1] Notify the control room operator that MCC-3 has automatically shutdown and is being investigated.

WARNING

Due to the unknown nature or exact location of the condition which caused the automatic shutdown, all nonessential personnel shall stay clear of power distribution equipment associated with MCC-3 and TX-3.

[2] Clear the area around MCC-3 and TX-3 of all nonessential personnel until isolation procedure is complete.

[3] Inspect the exterior of MCC-3, TX-3, and MCC-A (compartment 4FA) for any signs of damage or conditions which may affect the system operation.

[4] At MCC-3, record the status of the following items:

[a] Main breaker - on, trip, or off.

[b] Phase-to-phase voltages on the panel-mounted voltmeter.

[c] All branch circuit breakers that have tripped.

[d] Ammeter readings for all phases.

[5] At MCC-A (compartment 4FA), record the status of the following items:

[a] Red, green, amber, and blue indicating lights - on or off.

[b] Ammeter readings for all phases.

[c] Loss of phase relay 46 - tripped or reset.

[6] At TX-3, record the status of the fuses for the load break disconnect switch.

7.2 Switching and Isolation Operations.

[1] If the MCC-3 main breaker and TX-3 & 4 feeder contactor have both tripped open, then isolate per paragraph 6 above.

[2] If only the MCC-3 main breaker has tripped open, then isolate as follows:

[a] Turn the handle of the MCC-3 main breaker to the OFF position.

[b] Attach a lock and tag to the handle of the MCC-3 main breaker.

[c] Enter the lock and tag into the lockout/tagout log.

[3] If the MCC-3 main breaker is still closed, but the TX-3 & 4 feeder contactor at MCC-A has tripped open, then isolate per paragraph 6 above.

[4] If the fuses for the TX-3 load break disconnect switch have blown open, then isolate per paragraph 6 above.

[5] Report all findings and actions taken to the supervisor.

8. RECORDS.

A. Any locks or tags attached to or removed from MCC-3 or MCC-A shall be entered in the lockout/tagout log.

B. Any findings of abnormal conditions shall be noted and reported to the control room operator, the supervisor, and the maintenance manager. A work request shall be initiated to correct the problem.

APPENDIX A

MCC-3 ONE-LINE DIAGRAM

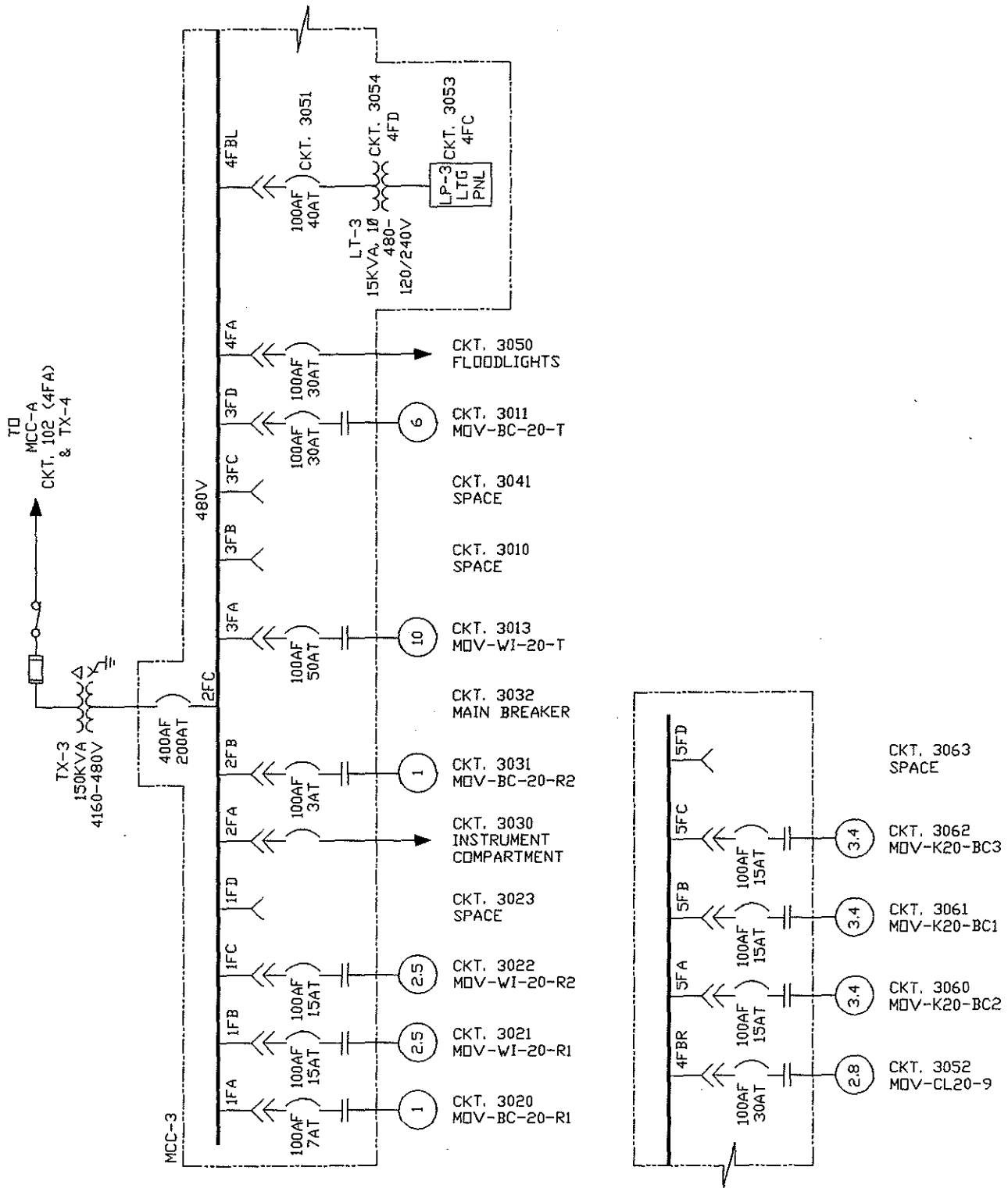

APPENDIX B

MCC-3 FRONT ELEVATION

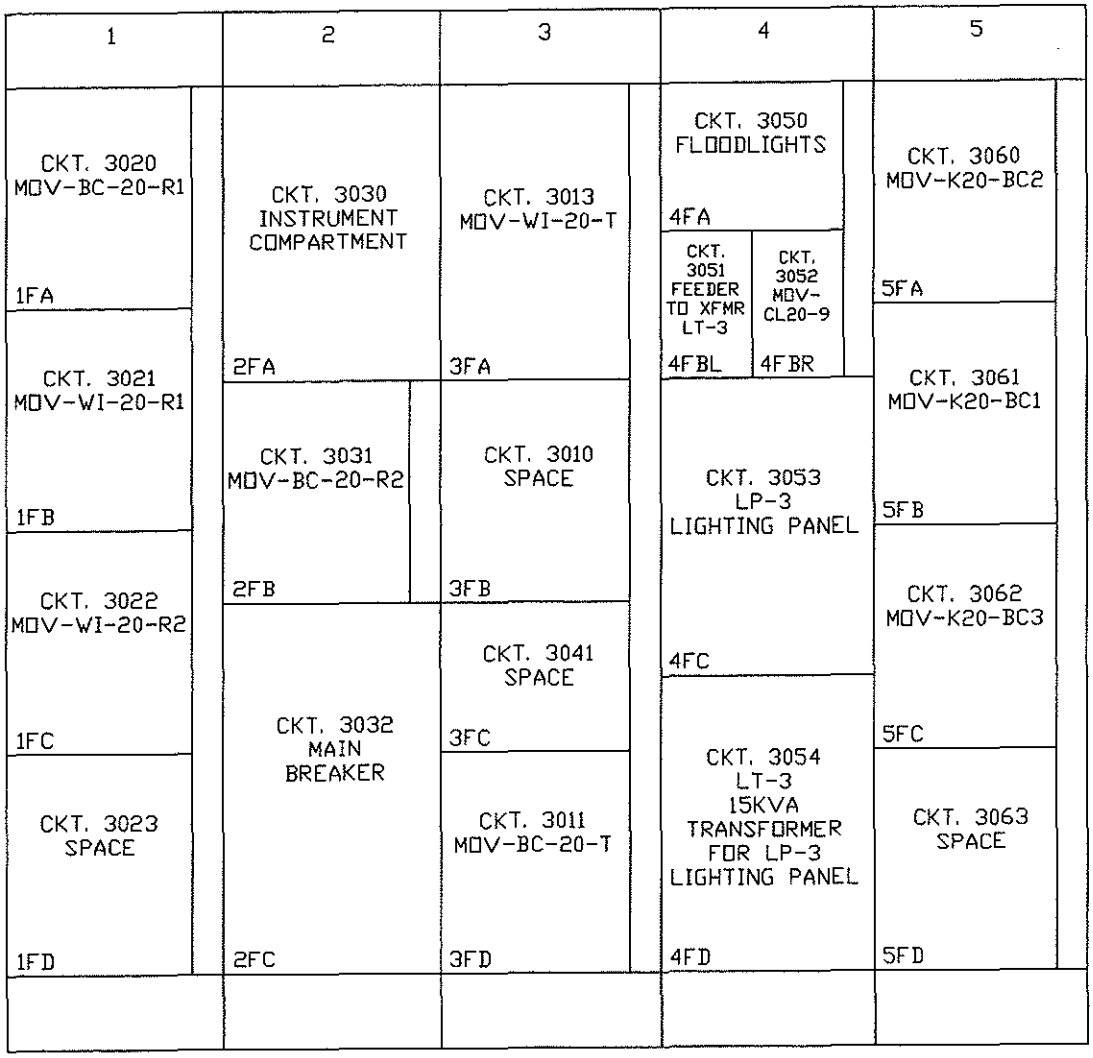

APPENDIX C

ELECTRICAL LOADS ASSOCIATED WITH MCC-3

The following list of electrical loads are fed from MCC-3 and will be affected by normal shutdown or automatic shutdown of MCC-3:

MOV-BC-20-R1.
MOV-WI-20-R1.
MOV-WI-20-R2.
MOV-BC-20-R2.
MOV-WI-20-T.
MOV-BC-20-T.
Floodlights.
MOV-CL20-9.
LP-3 Lighting panel.
15KVA transformer for LP-3.
MOV-K20-BC2.
MOV-K20-BC1.
MOV-K20-BC3.

NORMAL OPERATING PROCEDURE

SAINT JAMES SITE

480V MOTOR CONTROL CENTER MCC-4

NORMAL OPERATING PROCEDURE

SAINT JAMES SITE

480V MOTOR CONTROL CENTER MCC-4

List of Effective Work Package Pages

Page No.	Chg. No.	Page No.	Chg. No.	Page No.	Chg. No.
1 thru 20	0				

Record of Applicable Technical Directives

None

TABLE OF CONTENTS

Para.	Title	Page
1.	INTRODUCTION	3
1.1	Purpose	3
1.2	Scope	3
1.3	Applicability	3
1.4	Reference Documents	3
2.	PRECAUTIONS AND LIMITATIONS	4
3.	PREREQUISITE ACTIONS	4
4.	NORMAL STARTUP OPERATION OF MCC-4	5
4.1	Startup Preparations	5
4.2	Switching Operations	5
4.3	Monitoring	6
5.	NORMAL SHUTDOWN OPERATION OF MCC-4	6
5.1	Shutdown Preparations	6
5.2	Switching Operations	7
5.3	Verification	7
6.	ISOLATION PROCEDURE OF MCC-4	7
6.1	Coordination of Operations	7
6.2	Switching Operations	7
6.3	Securing the Equipment	9
7.	AUTOMATIC SHUTDOWN OF MCC-4	10
7.1	Shutdown Investigation	10
7.2	Switching and Isolation Operations	11
8.	RECORDS	11
Appendix A	MCC-4 One-Line Diagram	12
Appendix B	MCC-4 Front Elevation	15
Appendix C	Electrical Loads Associated with MCC-4	19

1. INTRODUCTION.

Motor Control Center No. 4 (MCC-4) is located outdoors in a NEMA type 3R rainproof enclosure south of the metering station. MCC-4 is a 480-volt, three-phase, three-wire system with a 600-ampere bus, 1200-ampere frame main breaker with a 1200-ampere trip. MCC-4 is fed from 5KV MCC-A (compartment 4FA) via step-down transformer TX-4. MCC-4 is used to distribute 480-volt, three-phase power to miscellaneous 480-volt loads. See Appendixes A, B, and C.

TX-4 is located outdoors by MCC-4. TX-4 is a 4160-480V, delta-wye, 750KVA, step-down transformer with a fused 600-ampere load break disconnect switch on the primary side.

1.1 Purpose. This procedure provides step-by-step operations which shall be performed to safely and efficiently operate MCC-4.

1.2 Scope. This procedure provides directions to an authorized electrician for the performance of the following activities under normal conditions:

A. Start up MCC-4 and TX-4.

B. Shut down MCC-4.

C. Isolate MCC-4 and TX-4.

D. Investigate an automatic shutdown of MCC-4.

1.3 Applicability. The activities described in this procedure shall be performed by an authorized electrician at the request of the supervisor.

1.4 Reference Documents.

A. Block Diagram Power Distribution, drawing SJ-E-302-018.

B. One-Line Diagram 5KV MCC-A & MCC-B, drawing SJ-E-302-056.

C. One-Line Diagram 480V MCC-4 & MCC-4E, drawing SJ-E-302-060.

D. Work package 007 00, 5KV Motor Control Center MCC-A.

E. Work package 009 00, 480V Motor Control Center MCC-3.

2. **PRECAUTIONS AND LIMITATIONS.**

The following precautions and limitations apply to the operation of MCC-4 and TX-4:

A. All nonessential personnel shall maintain a minimum distance of 10 feet from MCC-4 and TX-4 when power is first applied, until startup is complete.

B. Use of insulating gloves, protective body gowns, hooded face shields, and insulating floor mats are required during 5KV racking and switching operations.

C. A safety watch shall be stationed within view of the electrician performing 5KV switching operations.

D. The power source for MCC-4 is MCC-A via TX-4. The nominal phase-to-phase voltage from MCC-A is 4160 volts (4000V minimum) and 480 volts (460V to 510V acceptable) from TX-4.

E. If rain is imminent or is falling, the doors to the MCC-4 and TX-4 enclosures shall remain closed to prevent water entry.

3. **PREREQUISITE ACTIONS.**

The following prerequisite actions shall be accomplished prior to the operation of MCC-4 and TX-4:

A. Review the job safety analysis (JSA), if applicable, on this equipment for potential safety hazards and review associated one-line diagrams with the supervisor.

B. The supervisor shall verify that routine preventive maintenance has been performed on MCC-4, TX-4, and their components as described in the applicable maintenance requirement card (MRC).

C. The operations shift supervisor shall ensure all clearance orders (Safe Work Permits) associated with MCC-4 have been issued.

D. Visually inspect MCC-4, TX-4, and MCC-A (compartment 4FA) for any evidence of moisture, rodents, or other signs of damage. Report same to supervisor.

E. Visually check for any temporary wiring, grounds, locks, or tags. All findings shall be reported to the control room operator and the supervisor.

F. Site operations personnel shall verify equipment status and install or remove locks and tags as necessary.

4. NORMAL STARTUP OPERATION OF MCC-4.

A normal startup operation is performed when 480V power is applied to MCC-4 from MCC-A via TX-4. The following steps shall be executed to complete MCC-4 startup.

4.1 Startup Preparations.

[1] Obtain an electrical switching order (ESO) from the supervisor.

[2] Clear the area around MCC-4 and TX-4 of all nonessential personnel until startup is complete.

[3] At MCC-4, verify that all circuit breakers are in the OFF position.

[4] At TX-4, verify that the load break disconnect switch is in the CL (closed) position.

[5] At MCC-A (compartment 5FA), using the panel-mounted voltmeter, verify that phase-to-phase bus voltages are nominally 4160 volts. Report any phase-to-phase readings less than 4000 volts to the supervisor.

4.2 Switching Operations.

[1] Notify the control room operator that MCC-4 and TX-4 are being energized.

WARNING 1

Closing the TX-3 & 4 feeder contactor at MCC-A (compartment 4FA) will supply 4160V to the primary side of the load break disconnect switch for TX-3.

WARNING 2

An electrical fault and flash could cause injury or death to personnel. Use of insulating gloves, protective body gowns, hooded face shields, and insulating floor mats are required during 5KV racking and switching operations.

[2] At MCC-A (compartment 4FA), close the TX-3 & 4 feeder contactor as follows:

[a] While standing on an insulating floor mat and to the hinged side of the compartment, depress the disconnect switch release mechanism and rotate the disconnect switch handle to the ON position.

[b] Press the red CLOSE button.

[c] Verify that the red CLOSE indicating light is on.

[3] At MCC-4 (compartment 7FA), using the panel-mounted voltmeter, verify that phase-to-phase voltages are nominally 480 volts (460V to 510V acceptable).

NOTE
TX-4 is now energized.

[4] Notify the control room operator that TX-4 is now energized.

[5] At MCC-4 (compartment 8FA), turn the handle of the MCC-4 main breaker to the ON position.

4.3 Monitoring.

[1] At MCC-4 (compartment 7FA), using the panel-mounted voltmeter, verify that phase-to-phase bus voltages are nominally 480 volts (460V to 510V acceptable).

[2] Using the panel-mounted ammeter, verify that there is no load on MCC-4.

NOTE
MCC-4 is now energized and available for startup of other 480V equipment.

[3] Notify the control room operator that MCC-4 is now energized.

5. NORMAL SHUTDOWN OPERATION OF MCC-4.

A normal shutdown operation is performed when 480V power is removed from MCC-4. The following steps shall be executed to complete MCC-4 shutdown.

NOTE
TX-4 will remain energized.

5.1 Shutdown Preparations.

[1] Obtain an electrical switching order (ESO) from the supervisor.

[2] Clear the area around MCC-4 of all nonessential personnel until shutdown is complete.

[3] At MCC-4, verify that all branch circuits are de-energized by visually checking the position of all branch circuit breakers. Notify the supervisor of any remaining energized circuits.

5.2 Switching Operations.

[1] Notify the control room operator that MCC-4 is being de-energized.

[2] At MCC-4 (compartment 7FA), using the panel-mounted ammeter, verify that there is no load on MCC-4.

[3] At compartment 8FA, turn the handle of the MCC-4 main breaker to the OFF position.

5.3 Verification.

[1] At MCC-4 (compartment 7FA), using the panel-mounted ammeter, verify that there is no load on MCC-4.

NOTE
MCC-4 is now de-energized.

[2] Notify the control room operator that MCC-4 is now de-energized.

6. ISOLATION PROCEDURE OF MCC-4.

Isolation of MCC-4 and TX-4 will prevent normal startup operation of MCC-4 and TX-4. The following steps shall be executed only after MCC-4 shutdown operation (paragraph 5 above) is complete.

6.1 Coordination of Operations.

[1] Obtain an electrical switching order (ESO) from the supervisor.

[2] Notify the control room operator that MCC-4 and TX-4 are being isolated.

6.2 Switching Operations.

[1] Shut down MCC-3 per work package 009 00.

[2] At MCC-A (compartment 4FA), using the panel-mounted ammeter, verify that there is no load on the TX-3 & 4 feeder contactor.

NOTE

Tripping the TX-3 & 4 feeder contactor at compartment 4FA will de-energize both TX-3 and TX-4.

WARNING

An electrical fault and flash could cause injury or death to personnel. Use of insulating gloves, protective body gowns, hooded face shields, and insulating floor mats are required during 5KV switching operations.

[2] Trip the TX-3 & 4 feeder contactor by pushing the green TRIP button.

NOTE

If the TRIP button does not open the TX-3 & 4 feeder contactor, manually open the contactor by pulling the manual trip knob.

[3] Verify that the green OPEN and amber LOSS OF PHASE indicating lights are on and the red CLOSE indicating light is off.

WARNING

An electrical fault and flash could cause injury or death to personnel. Use of insulating gloves, protective body gowns, hooded face shields, and insulating floor mats are required when racking out 5KV contactors.

[4] Rack out the TX-3 & 4 feeder contactor as follows:

[a] While standing on an insulating floor mat and to the hinged side of the compartment, depress the disconnect switch release mechanism and rotate the disconnect switch handle to the OFF position.

[b] Verify that the red CLOSE, green OPEN, and amber LOSS OF PHASE indicating lights are off.

NOTE

Control power from LP-1 (MCC-1A compartment 6FC) is still present for the space heater and blue indicating light.

[5] At MCC-4 (compartment 7FA), using the panel-mounted voltmeter, verify that phase-to-phase voltages are zero.

[6] At TX-4, rotate the load break disconnect switch to the OPEN position.

[7] Verify that the TX-4 load break disconnect switch indicator shows OP.

NOTE
MCC-4 and TX-4 are now isolated.

[8] Notify the control room operator that MCC-4 and TX-4 are now isolated.

6.3 Securing the Equipment.

WARNING

Failure to lock out the TX-3 & 4 feeder contactor at MCC-A (compartment 4FA) and the MCC-4 main breaker at MCC-4 will create a potential hazard for personnel performing maintenance on MCC-4 and TX-4.

[1] At MCC-A (compartment 4FA), attach a lock and tag to the disconnect switch release mechanism of the OFF disconnect switch.

[2] At MCC-4 (compartment 8FA), attach a lock and tag to the handle of the OFF MCC-4 main breaker.

[3] Log all locks and tags installed as part of the isolation procedure.

NOTE 1
MCC-4 and TX-4 are now secured for maintenance.

NOTE 2
The number of each lock and tag as well as the name of the person who installed them shall be entered in the lockout/tagout log.

NOTE 3
A clearance order (Safe Work Permit) shall be obtained from the operations shift supervisor prior to start of work.

[4] Notify the control room operator that MCC-4 and TX-4 are now secured for maintenance.

7. AUTOMATIC SHUTDOWN OF MCC-4.

An automatic shutdown of MCC-4 occurs when protective devices detect an abnormal condition and trip open the TX-3 & 4 feeder contactor, the MCC-4 main breaker, or the fuses for the TX-4 load break disconnect switch are blown open. In the event of an automatic shutdown, the following steps shall be executed to assist maintenance personnel in determining the cause of the shutdown.

7.1 Shutdown Investigation.

[1] Notify the control room operator that MCC-4 has automatically shutdown and is being investigated.

WARNING

Due to the unknown nature or exact location of the condition which caused the automatic shutdown, all nonessential personnel shall stay clear of power distribution equipment associated with MCC-4 and TX-4.

[2] Clear the area around MCC-4 and TX-4 of all nonessential personnel until isolation procedure is complete.

[3] Inspect the exterior of MCC-4, TX-4, and MCC-A (compartment 4FA) for any signs of damage or conditions which may affect the system operation.

[4] At MCC-4, record the status of the following items:

[a] Main breaker - on, trip, or off.

[b] Phase-to-phase voltages on the panel-mounted voltmeter.

[c] All branch circuit breakers that have tripped.

[d] Ammeter readings for all phases.

[5] At MCC-A (compartment 4FA), record the status of the following items:

[a] Red, green, amber, and blue indicating lights - on or off.

[b] Ammeter readings for all phases.

[c] Loss of phase relay 46 - tripped or reset.

[6] AT TX-4, record the status of the fuses for the load break disconnect switch.

7.2 Switching and Isolation Operations.

[1] If the MCC-4 main breaker and TX-3 & 4 feeder contactor have both tripped open, then isolate per paragraph 6 above.

[2] If only the MCC-4 main breaker has tripped open, then isolate as follows:

[a] Turn the handle of the MCC-4 main breaker to the OFF position.

[b] Attach a lock and tag to the handle of the MCC-4 main breaker.

[c] Enter the lock and tag into the lockout/tagout log.

[3] If the MCC-4 main breaker is still closed, but the TX-3 & 4 feeder contactor at MCC-A has tripped open, then isolate per paragraph 6 above.

[4] If the fuses for the TX-4 load break disconnect switch have blown open, then isolate per paragraph 6 above.

[5] Report all findings and actions taken to the supervisor.

8. RECORDS.

A. Any locks or tags attached to or removed from MCC-4 or MCC-A shall be entered in the lockout/tagout log.

B. Any findings of abnormal conditions shall be noted and reported to the control room operator, the supervisor, and the maintenance manager. A work request shall be initiated to correct the problem.

APPENDIX A

MCC-4 ONE-LINE DIAGRAM
(Sheet 1 of 3)

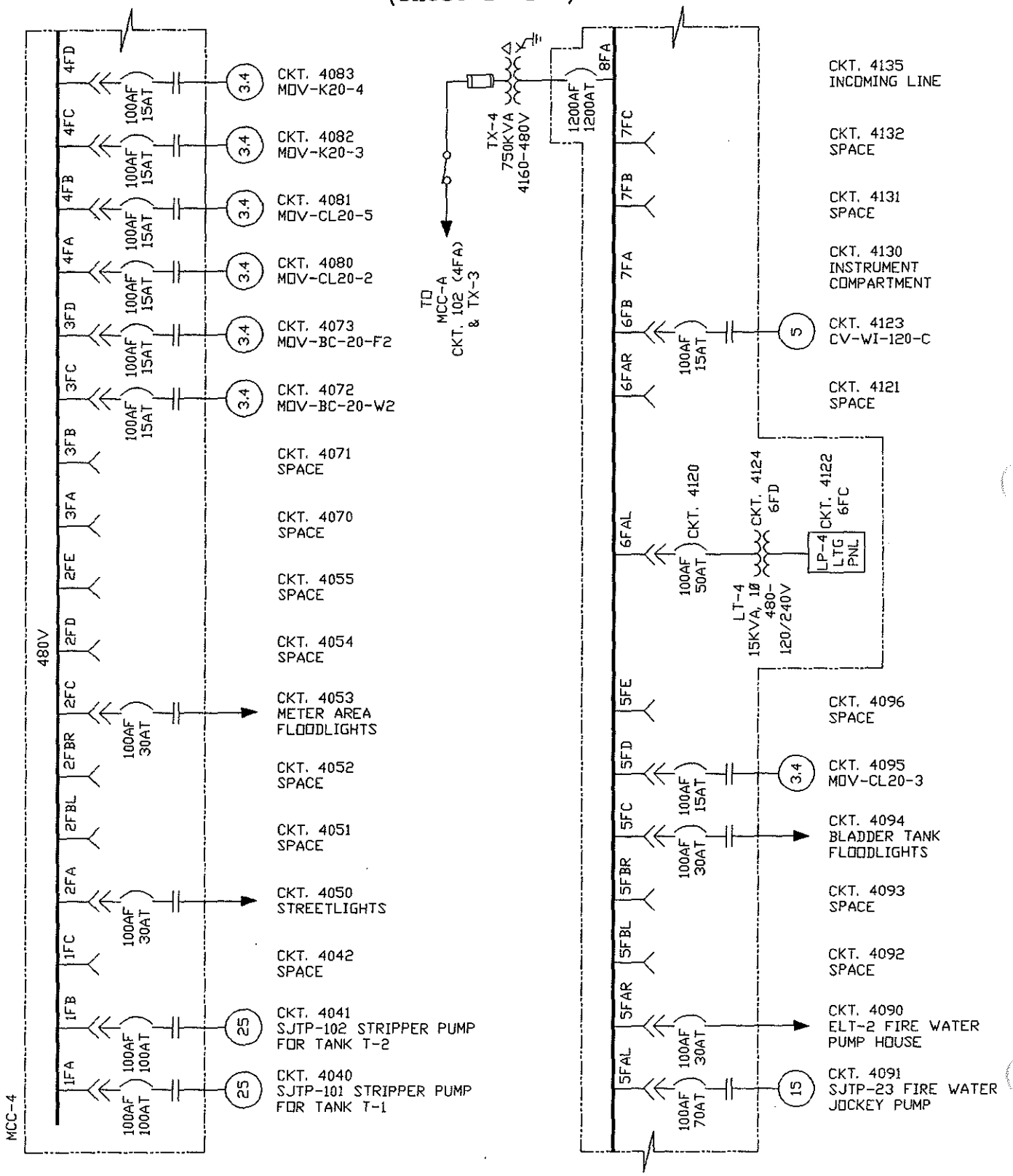

APPENDIX A

MCC-4 ONE-LINE DIAGRAM
(Sheet 2)

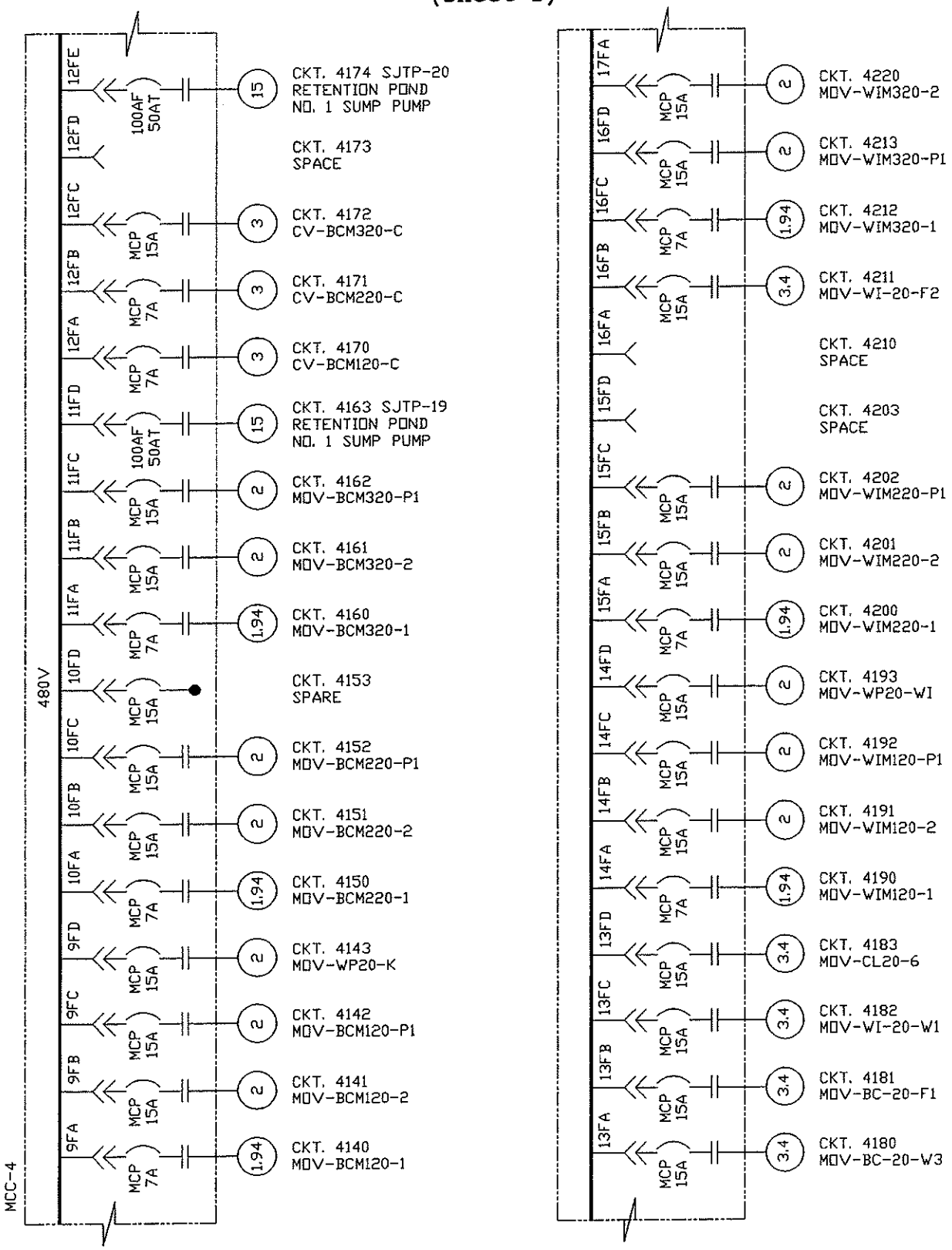

APPENDIX A

MCC-4 ONE-LINE DIAGRAM
(Sheet 3)

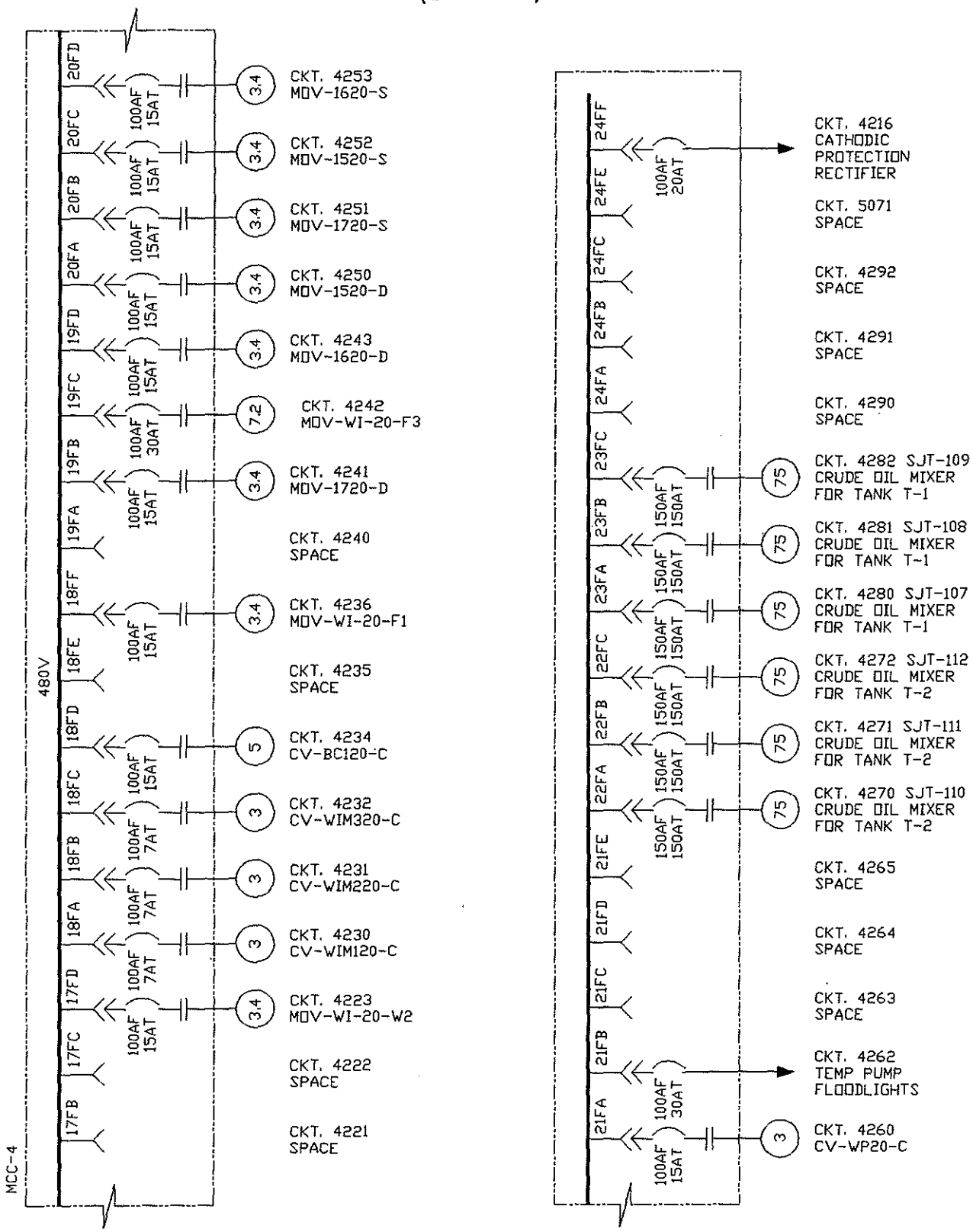

APPENDIX B

MCC-4 FRONT ELEVATION
(Sheet 1 of 4)

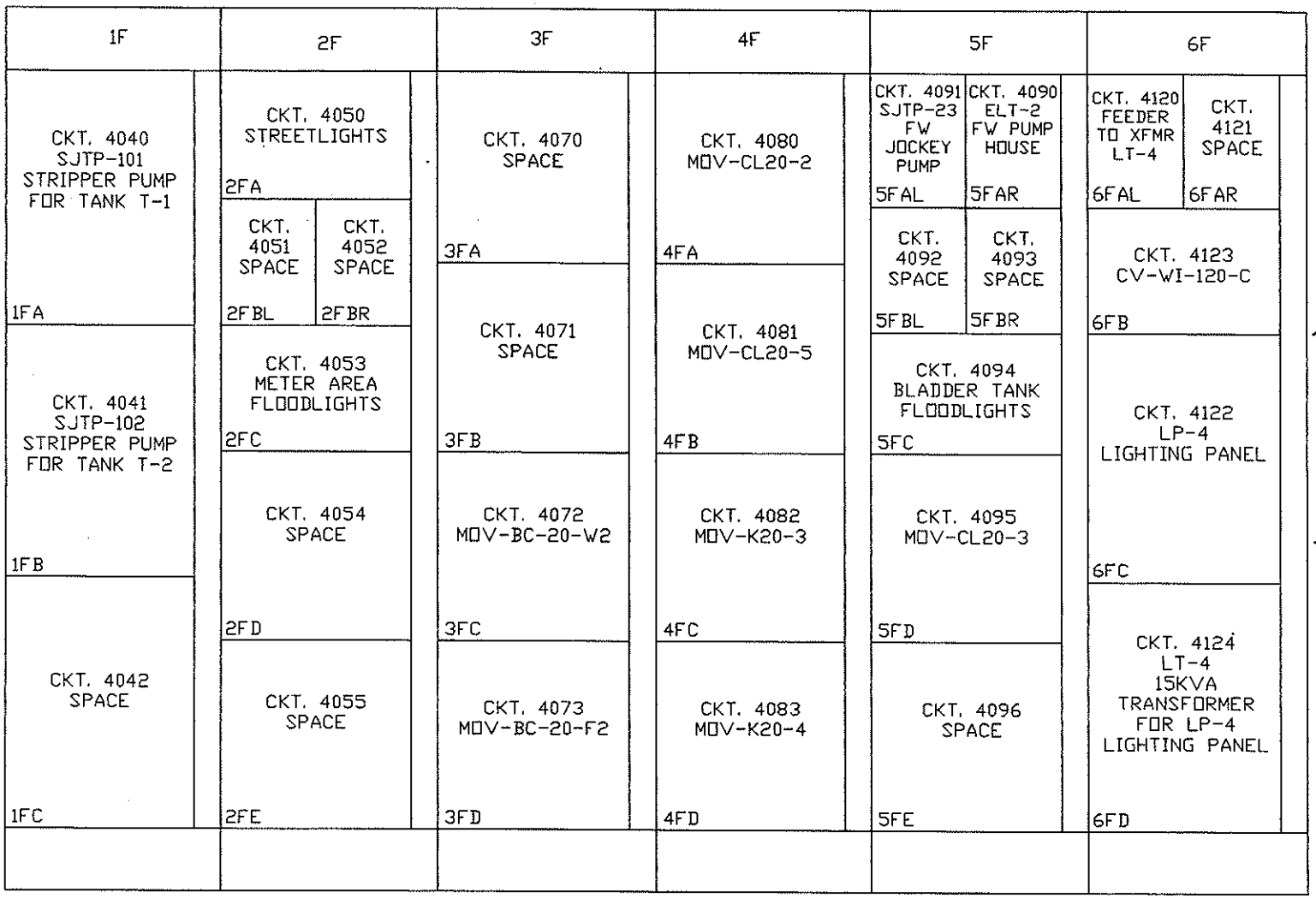

APPENDIX B

MCC-4 FRONT ELEVATION
(Sheet 2)

7F	8F	9F	10F	11F	12F
CKT. 4130 INSTRUMENT COMPARTMENT 7FA	CKT. 4135 INCOMING LINE 8FA	CKT. 4140 MOV-BCM120-1 9FA	CKT. 4150 MOV-BCM220-1 10FA	CKT. 4160 MOV-BCM320-1 11FA	CKT. 4170 CV-BCM120-C 12FA
		CKT. 4141 MOV-BCM120-2 9FB	CKT. 4151 MOV-BCM220-2 10FB	CKT. 4161 MOV-BCM320-2 11FB	CKT. 4171 CV-BCM220-C 12FB
CKT. 4131 SPACE 7FB		CKT. 4142 MOV-BCM120-P1 9FC	CKT. 4152 MOV-BCM220-P1 10FC	CKT. 4162 MOV-BCM320-P1 11FC	CKT. 4172 CV-BCM320-C 12FC
CKT. 4132 SPACE 7FC		CKT. 4143 MOV-WP20-K 9FD	CKT. 4153 SPARE 10FD	CKT. 4163 SJTP-19 RETENTION POND NO. 1 SUMP PUMP 11FD	CKT. 4173 SPACE 12FD
					CKT. 4174 SJTP-20 RETENTION POND NO. 1 SUMP PUMP 12FE

APPENDIX B

MCC-4 FRONT ELEVATION
(Sheet 3)

13F	14F	15F	16F	17F	18F
CKT. 4180 MOV-BC-20-W3 13FA	CKT. 4190 MOV-WIM120-1 14FA	CKT. 4200 MOV-WIM220-1 15FA	CKT. 4210 SPACE 16FA	CKT. 4220 MOV-WIM320-2 17FA	CKT. 4230 CV-WIM120-C 18FA
CKT. 4181 MOV-BC-20-F1 13FB	CKT. 4191 MOV-WIM120-2 14FB	CKT. 4201 MOV-WIM220-2 15FB	CKT. 4211 MOV-WI-20-F2 16FB	CKT. 4221 SPACE 17FB	CKT. 4231 CV-WIM220-C 18FB
CKT. 4182 MOV-WI-20-W1 13FC	CKT. 4192 MOV-WIM120-P1 134C	CKT. 4202 MOV-WIM220-P1 15FC	CKT. 4212 MOV-WIM320-1 16FC	CKT. 4222 SPACE 17FC	CKT. 4232 CV-WIM320-C 18FC
CKT. 4183 MOV-CL20-6 13FD	CKT. 4193 MOV-WP20-WI 14FD	CKT. 4203 SPACE 15FD	CKT. 4213 MOV-WIM320-P1 16FD	CKT. 4223 MOV-WI-20-W2 17FD	CKT. 4234 CV-BC120-C 18FD
					CKT. 4235 SPACE 18FE
					CKT. 4236 MOV-WI-20-F1 18FF

APPENDIX B

MCC-4 FRONT ELEVATION
(Sheet 4)

19F	20F	21F	22F	23F	24F
CKT. 4240 SPACE 19FA	CKT. 4250 MOV-1520-D 20FA	CKT. 4260 CV-WP20-C 21FA	CKT. 4270 SJT-110 CRUDE OIL MIXER FOR TANK T-2 22FA	CKT. 4280 SJT-107 CRUDE OIL MIXER FOR TANK T-1 23FA	CKT. 4290 SPACE 24FA
CKT. 4241 MOV-1720-D 19FB	CKT. 4251 MOV-1720-S 20FB	CKT. 4262 TEMP PUMP FLOODLIGHTS 21FB	CKT. 4271 SJT-111 CRUDE OIL MIXER FOR TANK T-2 22FB	CKT. 4281 SJT-108 CRUDE OIL MIXER FOR TANK T-1 23FB	CKT. 4291 SPACE 24FB
CKT. 4242 MOV-WI-20-F3 19FC	CKT. 4252 MOV-1520-S 20FC	CKT. 4263 SPACE 21FC	CKT. 4272 SJT-112 CRUDE OIL MIXER FOR TANK T-2 22FC	CKT. 4282 SJT-109 CRUDE OIL MIXER FOR TANK T-1 23FC	CKT. 4292 SPACE 24FC
CKT. 4243 MOV-1620-D 19FD	CKT. 4253 MOV-1620-S 20FD	CKT. 4264 SPACE 21FD			BLANK 24FD
		CKT. 4265 SPACE 21FE			CKT. 5071 SPACE 24FE
					CKT. 4216 CATH PROT 24FF

APPENDIX C

ELECTRICAL LOADS ASSOCIATED WITH MCC-4
(Sheet 1 of 2)

The following list of electrical loads are fed from MCC-4 and will be affected by normal shutdown or automatic shutdown of MCC-4:

SJTP-101 Stripper pump for tank T-1.
SJTP-102 Stripper pump for tank T-2.
Streetlights.
Meter area floodlights.
MOV-BC-20-W2.
MOV-BC-20-F2.
MOV-CL20-2.
MOV-CL20-5.
MOV-K20-3.
MOV-K20-4
SJTP-23 Fire water jockey pump, main site.
ELT-2 Fire water pump house.
Bladder tank floodlights.
MOV-CL20-3.
Control valve WI-120-C.
LP-4 Lighting panel.
15KVA transformer for LP-4 lighting panel.
MOV-BCM120-1.
MOV-BCM120-2.
MOV-BCM120-P1.
MOV-WP20-K.
MOV-BCM220-1.
MOV-BCM220-2.
MOV-BCM220-P1.
MOV-BCM320-1.
MOV-BCM320-2.
MOV-BCM320-P1.
SJTP-19 Retention pond no. 1 sump pump.
Control valve BCM120-C.
Control valve BCM220-C.
Control valve BCM320-C.
SJTP-20 Retention pond no.1 sump pump.
MOV-BC-20-W3.
MOV-BC-20-F1.
MOV-WI-20-W1.
MOV-CL20-6.
MOV-WIM120-1.
MOV-WIM120-2.
MOV-WIM120-P1.
MOV-WP20-WI.
MOV-WIM220-1.
MOV-WIM220-2.

APPENDIX C

ELECTRICAL LOADS ASSOCIATED WITH MCC-4
(Sheet 2)

MOV-WIM220-P1.
MOV-WI-20-F2.
MOV-WIM320-1.
MOV-WIM320-P1.
MOV-WIM320-2.
MOV-WI-20-W2.
Control valve WIM120-C.
Control valve WIM220-C.
Control valve WIM320-C.
Control valve BC120-C.
MOV-WI-20-F1.
MOV-1720-D.
MOV-WI-20-F3.
MOV-1620-D.
MOV-1520-D.
MOV-1720-S.
MOV-1520-S.
MOV-1620-S.
Control valve WP20-C.
Temp pump floodlights.
SJT-110 Crude oil mixer for tank T-2.
SJT-111 Crude oil mixer for tank T-2.
SJT-112 Crude oil mixer for tank T-2.
SJT-107 Crude oil mixer for tank T-1.
SJT-108 Crude oil mixer for tank T-1.
SJT-109 Crude oil mixer for tank T-1.
Cathodic protection rectifier.

NORMAL OPERATING PROCEDURE

SAINT JAMES SITE

5KV SWITCHGEAR BUS NO. 2

NORMAL OPERATING PROCEDURE

SAINT JAMES SITE

5KV SWITCHGEAR BUS NO. 2

List of Effective Work Package Pages

Page Number	Revision Number	Page Number	Revision Number
1/(2 Blank)	1		

Record of Applicable Technical Directives

None

NOTE

This work package has been voided.

NORMAL OPERATING PROCEDURE

SAINT JAMES SITE

5KV SWITCHGEAR BUS-TIE BREAKER

NORMAL OPERATING PROCEDURE

SAINT JAMES SITE

5KV SWITCHGEAR BUS-TIE BREAKER

Page Number	Revision Number	Page Number	Revision Number
1/(2 Blank)	1		

Record of Applicable Technical Directives

None

NOTE

This work package has been voided.

NORMAL OPERATING PROCEDURE

SAINT JAMES SITE

5KV MOTOR CONTROL CENTER MCC-B

NORMAL OPERATING PROCEDURE

SAINT JAMES SITE

5KV MOTOR CONTROL CENTER MCC-B

List of Effective Work Package Pages

Page Number	Revision Number	Page Number	Revision Number
1/(2 Blank)	1		

Record of Applicable Technical Directives

None

NOTE

This work package has been voided. Refer to work package 013 01.

NORMAL OPERATING PROCEDURE

SAINT JAMES SITE

5KV MOTOR CONTROL CENTER MCC-B

NORMAL OPERATING PROCEDURE

SAINT JAMES SITE

5KV MOTOR CONTROL CENTER MCC-B

List of Effective Work Package Pages

Page Number	Revision Number	Page Number	Revision Number
1 thru 24	2		

Record of Applicable Technical Directives

None

TABLE OF CONTENTS

Para.	Title	Page
1.	INTRODUCTION	4
1.1	Purpose	4
1.2	Scope	4
1.3	Applicability	4
1.4	Reference Documents	4
2.	PRECAUTIONS AND LIMITATIONS	5
3.	PREREQUISITE ACTIONS	5
4.	NORMAL STARTUP OPERATION OF MCC-B	5
4.1	Startup Preparations	6
4.2	Switching Operations	6
4.3	Monitoring	8
5.	NORMAL STARTUP OPERATION OF 5KV MOTOR STARTERS FOR PUMPS SJT-2, SJT-5, SJT-7, AND SJT-8	8
5.1	Startup Preparations	8
5.2	Switching Operations	9
5.3	Monitoring	9
6.	NORMAL SHUTDOWN OPERATION OF 5KV MOTOR STARTERS FOR PUMPS SJT-2, SJT-5, SJT-7, AND SJT-8	9
6.1	Shutdown Preparations	10
6.2	Switching Operations	10
6.3	Verification	10
7.	ISOLATION PROCEDURE OF 5KV MOTOR STARTERS FOR PUMPS SJT-2, SJT-5, SJT-7, AND SJT-8	10
7.1	Coordination of Operations	11
7.2	Switching Operations	11
7.3	Securing the Equipment	12
8.	NORMAL SHUTDOWN OPERATION OF MCC-B	12
8.1	Shutdown Preparations	12
8.2	Switching Operations	13
8.3	Verification	13
9.	ISOLATION PROCEDURE OF MCC-B	14

TABLE OF CONTENTS (Continued)

Para.	Title	Page
9.1	Coordination of Operations	14
9.2	Switching Operations	14
9.3	Securing the Equipment	15
10.	AUTOMATIC SHUTDOWN OF MCC-B	16
10.1	Shutdown Investigation	16
10.2	Switching and Isolation Operations	17
11.	AUTOMATIC SHUTDOWN OF 5KV MOTOR STARTERS FOR PUMPS SJT-2, SJT-5, SJT-7, AND SJT-8	17
11.1	Shutdown Investigation	17
11.2	Switching and Isolation Operations	17
12.	RECORDS	18
Appendix A	One-Line Diagram	19
Appendix B	Elevations	20
Appendix C	Electrical Loads	22

1. INTRODUCTION.

Motor Control Center B (MCC-B) is located in the motor control center room of building 704. MCC-B is a 4160-volt, three-phase, three-wire system with a 2000-ampere bus. MCC-B is fed from a feeder breaker at the 5KV switchgear bus no. 1 (compartment 5) located in 5KV switchgear building no. 722. MCC-B is used to feed 480V MCC-1B via step-down transformer TX-2, through automatic transfer switch SJATS-1, 480V MCC-5 via step-down transformer TX-5, 480V MCC-6 via step-down transformer TX-6, and 4160V pumps SJT-2, SJT-5, SJT-7, and SJT-8. See Appendixes A, B, and C.

1.1 **Purpose.** This procedure provides step-by-step operations which shall be performed to safely and efficiently operate MCC-B.

1.2 **Scope.** This procedure provides directions to an authorized electrician for the performance of the following activities under normal conditions:

A. Start up MCC-B.

B. Start up 5KV motor starters for pumps SJT-2, SJT-5, SJT-7, and SJT-8.

C. Shut down 5KV motor starters for pumps SJT-2, SJT-5, SJT-7, and SJT-8.

D. Isolate 5KV motor starters for pumps SJT-2, SJT-5, SJT-7, and SJT-8.

E. Shut down MCC-B.

F. Isolate MCC-B.

G. Investigate an automatic shutdown of MCC-B.

H. Investigate an automatic shutdown of 5KV motor starters for pumps SJT-2, SJT-5, SJT-7, and SJT-8.

1.3 **Applicability.** The activities described in this procedure shall be performed by an authorized electrician at the request of the supervisor.

1.4 **Reference Documents.**

A. Block Diagram Power Distribution, drawing SJ-E-302-018.

B. One-Line Diagram Substation & 5KV Switchgear, drawing SJ-E-302-055.

C. One-Line Diagram 5KV MCC-A and MCC-B, drawing SJ-E-302-056.

D. Work package 005 00, 5KV Switchgear Bus No. 1.

2. PRECAUTIONS AND LIMITATIONS.

The following precautions and limitations apply to the operation of MCC-B:

A. All nonessential personnel shall maintain a minimum distance of 10 feet from MCC-B when power is first applied, until startup is complete.

B. Use of insulating gloves, protective body gowns, hooded face shields, and insulating floor mats are required during 5KV racking or switching operations.

C. A safety watch shall be stationed within view of the electrician performing 5KV switching operations.

D. The power source for MCC-B is 5KV switchgear bus no. 1. The nominal phase-to-phase voltage from this source is 4160 volts (4000 volts minimum).

3. PREREQUISITE ACTIONS.

The following prerequisite actions shall be accomplished prior to the operation of MCC-B:

A. Review the job safety analysis (JSA), if applicable, on this equipment for potential safety hazards and review associated one-line diagrams with the supervisor.

B. The supervisor shall verify that routine preventive maintenance has been performed on MCC-B and its components as described in the applicable maintenance requirement card (MRC).

C. The operations shift supervisor shall ensure all clearance orders (Safe Work Permits) associated with MCC-B have been issued.

D. Visually inspect MCC-B and 5KV switchgear bus no. 1 (compartment 5) for any evidence of moisture, rodents, or other signs of damage. Report same to supervisor.

E. Visually check for any temporary wiring, grounds, locks, or tags. All findings shall be reported to the control room operator and the supervisor.

F. Site operations personnel shall verify equipment status and install or remove locks and tags as necessary.

4. NORMAL STARTUP OPERATION OF MCC-B.

A normal startup operation is performed when 4160V power is applied to MCC-B from 5KV switchgear bus no. 1. The following steps shall be executed to complete MCC-B startup.

4.1 Startup Preparations.

[1] Obtain an electrical switching order (ESO) from the supervisor.

[2] Clear the area around MCC-B of all nonessential personnel until startup is complete.

[3] At MCC-B, verify that all circuits are off by visually checking the position of all contactors.

[4] At 5KV switchgear bus no. 1 (compartment 2), using the panel-mounted voltmeter, verify that phase-to-phase bus voltages are nominally 4160 volts. Report any phase-to-phase readings less than 4000 volts to the supervisor.

4.2 Switching Operations.

[1] Notify the control room operator that the MCC-B feeder breaker at 5KV switchgear bus no. 1 is being racked in.

WARNING

An electrical fault and flash could cause injury or death to personnel. Use of insulating gloves, protective body gowns, hooded face shields, and insulating floor mats are required when racking in 5KV circuit breakers.

[2] At 5KV switchgear bus no. 1 (compartment 5), rack in the MCC-B feeder breaker as follows:

[a] Open the compartment door.

[b] Push the breaker completely into the compartment.

[c] Mount the drive motor on the right side of the compartment.

[d] Place the drive motor toggle switch in the center position.

[e] Insert the drive motor electric plug into the receptacle on the right side of the compartment.

[f] Pull the lever on the right side of the compartment towards the drive motor.

[g] Place the drive motor toggle switch in the RAISE position and hold the lever until the breaker is in the fully raised position.

NOTE 1

If the drive motor does not operate, the manual crank handle stored in 5KV switchgear building 722 can be used to raise the breaker. Clockwise rotation raises the breaker.

NOTE 2

When the breaker is racked in, the breaker closing springs will be automatically compressed by a high speed gear electric motor located in the breaker mechanism.

[h] Release the lever and place the drive motor toggle switch in the center position.

[i] Withdraw the drive motor electric plug from the receptacle.

[j] Verify that the yellow CHGD flag is showing on the left side of the breaker.

[k] Remove the manual crank handle, if used, and close the compartment door.

[3] Verify that the green OPEN indicating light is on and the red CLOSE and white TRIP indicating lights are off.

[4] Verify that the following protective relays are reset:

[a] Phase overcurrent relays - 50/51 (3 places).

[b] Ground overcurrent relay - 51GS.

[c] Lockout relay - 86.

[5] Notify the control room operator that the MCC-B feeder breaker is being closed.

[6] Verify that the CAP TRIP #1 CHARGED indicating light or the CAP TRIP #2 CHARGED indicating light is on.

WARNING

An electrical fault and flash could cause injury or death to personnel. Use of insulating gloves, protective body gowns, hooded face shields, and insulating floor mats are required during 5KV switching operations.

[7] While standing on an insulating floor mat and to the hinged side of the compartment, turn the control switch to the CLOSE position. Return the control switch to the center position.

NOTE 1

If the control switch does not close the breaker, open the compartment door and manually close the breaker by pushing the MANUAL CLOSE.

NOTE 2

After closing, the high speed gear motor automatically recharges the closing springs.

4.3 Monitoring.

[1] At 5KV switchgear bus no. 1 (compartment 5), verify that the red CLOSE indicating light is on and the green OPEN and white TRIP indicating lights are off.

[2] Verify that the protective relays have not tripped.

[3] Using the panel-mounted ammeter, verify that there is no load on the MCC-B feeder breaker.

[4] At MCC-B (compartment 4FA), using the panel-mounted voltmeter, verify that phase-to-phase bus voltages are nominally 4160 volts.

[5] Using the panel-mounted ammeter, verify that there is no load on MCC-B.

NOTE

MCC-B is now energized and available for startup of other 5KV electrical equipment.

[6] Notify the control room operator that MCC-B is now energized.

5. NORMAL STARTUP OPERATION OF 5KV MOTOR STARTERS FOR PUMPS SJT-2, SJT-5, SJT-7, and SJT-8.

A normal startup operation is performed when 4160V power is applied to 5KV motor starters for pumps SJT-2, SJT-5, SJT-7, and SJT-8 from MCC-B. The following steps shall be executed to complete startup of 5KV motor starters for pumps SJT-2, SJT-5, SJT-7, and SJT-8.

5.1 Startup Preparations.

[1] Obtain an electrical switching order (ESO) from the supervisor to energize the 5KV motor starter for the selected pump.

[2] At MCC-B (compartment 4FA), using the panel-mounted voltmeter, verify that phase-to-phase bus voltages are nominally 4160 volts. Report any phase-to-phase readings less than 4000 volts to the supervisor.

[3] Clear the area around MCC-B of all nonessential personnel until startup is complete.

5.2 Switching Operations.

[1] Notify the control room operator that the 5KV motor starter at MCC-B for the selected pump is being energized.

WARNING

An electrical fault and flash could cause injury or death to personnel. Use of insulating gloves, protective body gowns, hooded face shields, and insulating floor mats are required when racking in 5KV motor starters.

[2] At MCC-B, energize the 5KV motor starter for the selected pump as follows:

[a] While standing on an insulating floor mat and to the hinged side of the compartment, depress the disconnect switch release mechanism and rotate the disconnect switch handle to the ON position.

[b] Verify that the protective relays have not tripped.

[c] Verify that the MOA switch is in the OFF position.

[d] Press the red RESET button.

[e] Verify that the green STOP indicating light is on.

5.3 Monitoring.

[1] At MCC-B, using the panel-mounted ammeter, verify that there is no load on the 5KV motor starter for the selected pump.

[2] Verify that the protective relays have not tripped.

[3] Verify that the green STOP indicating light is on.

NOTE

The 5KV motor starter for the selected pump is now energized.

[4] Notify the control room operator that the 5KV motor starter for the selected pump is now energized.

6. NORMAL SHUTDOWN OPERATION OF 5KV MOTOR STARTERS FOR PUMPS SJT-2, SJT-5, SJT-7, and SJT-8.

A normal shutdown operation is performed when 120/240VAC control power is removed from 5KV motor starters for pumps SJT-2, SJT-5, SJT-7, and SJT-8. The following steps shall be executed to complete shutdown of 5KV motor starters for pumps SJT-2, SJT-5, SJT-7, and SJT-8.

6.1 Shutdown Preparations.

[1] Obtain an electrical switching order (ESO) from the supervisor to shut down the 5KV motor starter for the selected pump.

[2] Clear the area around MCC-B of all nonessential personnel until shutdown is complete.

6.2 Switching Operations.

[1] Notify the control room operator that the 5KV motor starter for the selected pump is being de-energized.

WARNING

An electrical fault and flash could cause injury or death to personnel. Use of insulating gloves, protective body gowns, hooded face shields, and insulating floor mats are required during 5KV switching operations.

[2] At MCC-B, press the green STARTER LOCKOUT button for the selected pump.

[3] Verify that the green STOP indicating light is off.

6.3 Verification.

[1] At MCC-B, using the panel-mounted ammeter, verify that there is no load on the 5KV motor starter for the selected pump.

[2] Verify that the green STOP indicating light is off.

NOTE

5KV motor starter for the selected pump is now de-energized.

[3] Notify the control room operator that the 5KV motor starter for the selected pump is now de-energized.

7. ISOLATION PROCEDURE OF 5KV MOTOR STARTERS FOR PUMPS SJT-2, SJT-5, SJT-7, and SJT-8.

Isolation of 5KV motor starters for pumps SJT-2, SJT-5, SJT-7, and SJT-8 will prevent normal startup operation of 5KV motor starters for pumps SJT-2, SJT-5, SJT-7, and SJT-8. The following steps shall be executed only after the shutdown procedure of 5KV motor starters for pumps SJT-2, SJT-5, SJT-7, and SJT-8 (paragraph 6 above) are complete.

7.1 Coordination of Operations.

[1] Obtain an electrical switching order (ESO) from the supervisor to isolate the 5KV motor starter for the selected pump.

[2] Notify the control room operator that the 5KV motor starter for the selected pump is being isolated.

7.2 Switching Operations.

[1] At MCC-B, using the panel-mounted ammeter, verify that there is no load on the 5KV motor starter for the selected pump.

WARNING

An electrical fault and flash could cause injury or death to personnel. Use of insulating gloves, protective body gowns, hooded face shields, and insulating floor mats are required during 5KV switching operations.

[2] Press the green STARTER LOCKOUT button.

[3] Verify that the green STOP and red RUN indicating lights are off.

WARNING

An electrical fault and flash could cause injury or death to personnel. Use of insulating gloves, protective body gowns, hooded face shields, and insulating floor mats are required when racking out 5KV motor starters.

[4] Rack out the 5KV motor starter for the selected pump as follows:

[a] While standing on an insulating floor mat and to the hinged side of the compartment, depress the disconnect switch release mechanism and rotate the disconnect switch handle to the OFF position.

NOTE

Control power from LP-1 (MCC-1A compartment 6FC) is still present for the space heaters and blue indicating lights.

[5] Notify the control room operator that the 5KV motor starter for the selected pump is now isolated.

7.3 Securing the Equipment.

WARNING

Failure to lock out 5KV motor starters for pumps SJT-2, SJT-5, SJT-7, and SJT-8 will create a potential hazard for personnel performing maintenance.

[1] At MCC-B, attach a lock and tag to the disconnect switch release mechanism of the OFF disconnect switch for the selected pump.

[2] Log all locks and tags installed as part of the isolation procedure.

NOTE 1

The 5KV motor starter for the selected pump is now secured for maintenance.

NOTE 2

The number of each lock and tag as well as the name of the person who installed them shall be entered in the lockout/tagout log.

NOTE 3

A clearance order (Safe Work Permit) shall be obtained from the operations shift supervisor prior to start of work.

[3] Notify the control room operator that the 5KV motor starter for the selected pump is now secured for maintenance.

8. NORMAL SHUTDOWN OPERATION OF MCC-B.

A normal shutdown operation is performed when 4160V power is removed from MCC-B. The following steps shall be executed to complete MCC-B shutdown.

NOTE

When MCC-B is shut down, MCC-1B will be fed from emergency generator SJEG-10.

8.1 Shutdown Preparations.

[1] Obtain an electrical switching order (ESO) from the supervisor.

[2] Clear the area around MCC-B of all nonessential personnel until shutdown is complete.

[3] At MCC-B, verify that all circuits are off by visually checking the position of all contactors. Notify the supervisor of any remaining energized circuits.

8.2 Switching Operations.

[1] Notify the control room operator that MCC-B is being de-energized.

[2] At 5KV switchgear bus no. 1 (compartment 5), using the panel-mounted ammeter, verify that there is no load on the MCC-B feeder breaker.

[3] Verify that the CAP TRIP #1 CHARGED indicating light or the CAP TRIP #2 CHARGED indicating light is on.

WARNING

An electrical fault and flash could cause injury or death to personnel. Use of insulating gloves, protective body gowns, hooded face shields, and insulating floor mats are required during 5KV switching operations.

[4] While standing on an insulating floor mat and to the hinged side of the compartment, turn the control switch to the TRIP position. Return the control switch to the center position.

NOTE

If the control switch does not trip the breaker, open the compartment door and manually trip the breaker by pushing the MANUAL TRIP.

WARNING

120/240VAC control power is still present in each switchgear compartment.

8.3 Verification.

[1] At 5KV switchgear bus no. 1 (compartment 5), verify that the green OPEN indicating light is on and the red CLOSE and white TRIP indicating lights are off.

[2] Using the panel-mounted ammeter, verify that there is no load on the MCC-B feeder breaker.

[3] Open the compartment door and verify that the mechanical status indicator shows OPEN.

[4] Close the compartment door.

[5] At MCC-B (compartment 4FA), using the panel-mounted voltmeter, verify that phase-to-phase bus voltages are zero.

[6] Using the panel-mounted ammeter, verify that there is no load on MCC-B.

NOTE
MCC-B is now de-energized.

[7] Notify the control room operator that MCC-B is now de-energized.

9. ISOLATION PROCEDURE OF MCC-B.

Isolation of MCC-B will prevent normal startup operation of MCC-B. The following steps shall be executed only after MCC-B shutdown operation (paragraph 8 above) is complete.

9.1 Coordination of Operations.

[1] Obtain an electrical switching order (ESO) from the supervisor.

[2] Notify the control room operator that MCC-B is being isolated.

9.2 Switching Operations.

[1] At 5KV switchgear bus no. 1 (compartment 5), open the compartment door and verify that the mechanical status indicator shows OPEN.

WARNING

An electrical fault and flash could cause injury or death to personnel. Use of insulating gloves, protective body gowns, hooded face shields, and insulating floor mats are required when racking out 5KV circuit breakers.

[2] Rack out the MCC-B feeder breaker as follows:

[a] Open the compartment door.

[b] Mount the drive motor on the right side of the compartment.

[c] Place the drive motor toggle switch in the center position.

[d] Insert the drive motor electric plug into the receptacle on the right side of the compartment.

[e] Pull the lever on the right side of the compartment towards the drive motor.

[f] Place the drive motor toggle switch in the LOWER position and hold the lever until the breaker touches the floor of the compartment.

NOTE

If the drive motor does not operate, the manual crank handle stored in 5KV switchgear building 722 can be used to lower the breaker. Counterclockwise rotation lowers the breaker.

[g] Release the lever and place the drive motor toggle switch in the center position.

[h] Withdraw the drive motor electric plug from the receptacle.

[i] Remove the manual crank handle, if used, and close the compartment door.

NOTE 1

The green OPEN, red CLOSE, and white TRIP indicating lights should be off.

NOTE 2

MCC-B is now isolated.

[3] Notify the control room operator that MCC-B is now isolated.

9.3 Securing the Equipment.

WARNING

Failure to lock out the MCC-B feeder breaker at 5KV switchgear bus no. 1 (compartment 5), will create a potential hazard for personnel performing maintenance on MCC-B.

[1] At 5KV switchgear bus no. 1 (compartment 5), attach a lock and tag to the compartment door.

[2] Log all locks and tags installed as part of this isolation procedure.

NOTE 1

MCC-B is now secured for maintenance.

NOTE 2

The number of each lock and tag as well as the name of the person who installed them shall be entered in the lockout/tagout log.

NOTE 3

A clearance order (Safe Work Permit) shall be obtained from the operations shift supervisor prior to start of work.

[3] Notify the control room operator that MCC-B is now secured for maintenance.

10. AUTOMATIC SHUTDOWN OF MCC-B.

An automatic shutdown of MCC-B occurs when protective devices detect an abnormal condition and trip open the MCC-B feeder breaker at 5KV switchgear bus no. 1 (compartment 5). In the event of an automatic shutdown, the following steps shall be executed to assist maintenance personnel in determining the cause of the shutdown.

10.1 Shutdown Investigation.

[1] Notify the control room operator that MCC-B has automatically shut down and is being investigated.

WARNING

Due to the unknown nature or exact location of the condition which caused the automatic shutdown, all nonessential personnel shall stay clear of power distribution equipment associated with MCC-B.

[2] Clear the area around MCC-B and 5KV switchgear bus no. 1 of all nonessential personnel until isolation procedure is complete.

[3] Inspect the exterior of MCC-B and 5KV switchgear bus no. 1 for any signs of damage or conditions which may affect the system operation.

[4] At 5KV switchgear bus no. 1 (compartment 5), record the status of the following items:

[a] Lockout relay (86) - tripped or reset.

[b] Green, red, and white indicating lights - on or off.

[c] Protective relays - tripped or reset.

[d] Mechanical status indicator - open or closed.

[5] At MCC-B, record the status of the following items as applicable:

[a] Lockout relay (86) - tripped or reset.

[b] Green, red, amber, and blue indicating lights - on or off.

[c] Protective relays - tripped or reset.

[6] Obtain the data log from the DCS printout in the control room to establish time of shutdown.

10.2 Switching and Isolation Operations.

[1] If the MCC-B feeder breaker at 5KV switchgear bus no. 1 (compartment 5) has tripped open, then perform isolation procedure per paragraph 9 above.

[2] Report all findings and actions taken to the supervisor.

11. AUTOMATIC SHUTDOWN OF 5KV MOTOR STARTERS FOR PUMPS SJT-2, SJT-5, SJT-7, and SJT-8.

An automatic shutdown of 5KV motor starters for pumps SJT-2, SJT-5, SJT-7, and SJT-8 occurs when protective devices detect an abnormal condition and trip open 5KV motor starters for pumps SJT-2, SJT-5, SJT-7, and SJT-8 at MCC-B. In the event of an automatic shutdown, the following steps shall be executed to assist maintenance personnel in determining the cause of the shutdown.

11.1 Shutdown Investigation.

[1] Notify the control room operator that the 5KV motor starter for the selected pump has automatically shut down and is being investigated.

WARNING

Due to the unknown nature or exact location of the condition which caused the automatic shutdown, all nonessential personnel shall stay clear of power distribution equipment associated with the selected pump.

[2] Clear the area around MCC-B of all nonessential personnel until isolation procedures are complete.

[3] Inspect the exterior of MCC-B for any signs of damage or conditions which may affect the system operation.

[4] At MCC-B, record the status of the following items for the selected pump as applicable:

[a] Lockout relay (86) - tripped or reset.

[b] Green, red, and blue indicating lights - on or off.

[c] Protective relay - tripped or reset.

11.2 Switching and Isolation Operations.

[1] If the 5KV motor starter for pump SJT-2, SJT-5, SJT-7 or SJT-8, at MCC-B has tripped open, then perform isolation procedure per paragraph 7 above.

[2] Report all findings and actions taken to the supervisor.

12. RECORDS.

A. Any lock or tag attached to or removed from MCC-B or 5KV switchgear bus no. 1 (compartment 5) shall be entered in the lockout/tagout log.

B. Any findings of abnormal conditions shall be noted and reported to the control room operator, the supervisor, and the maintenance manager. A work request shall be initiated to correct the problem.

APPENDIX A

ONE-LINE DIAGRAM

MCC-B

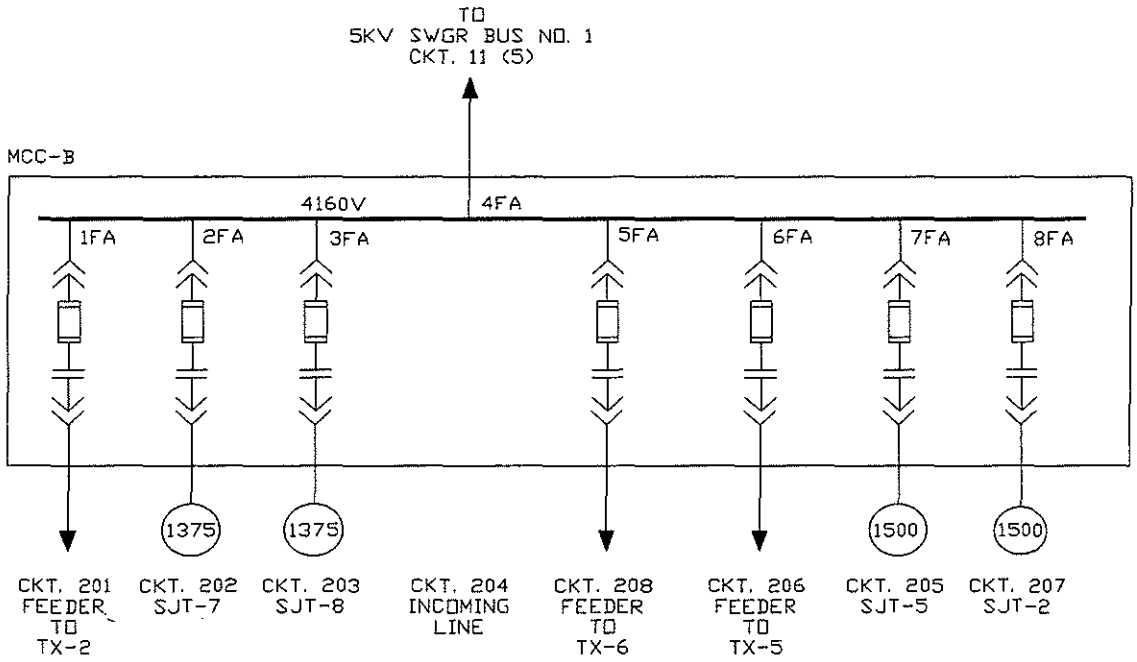

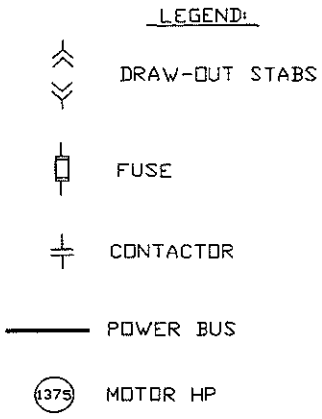

APPENDIX B

ELEVATIONS (Sheet 1 of 2)

MCC-B

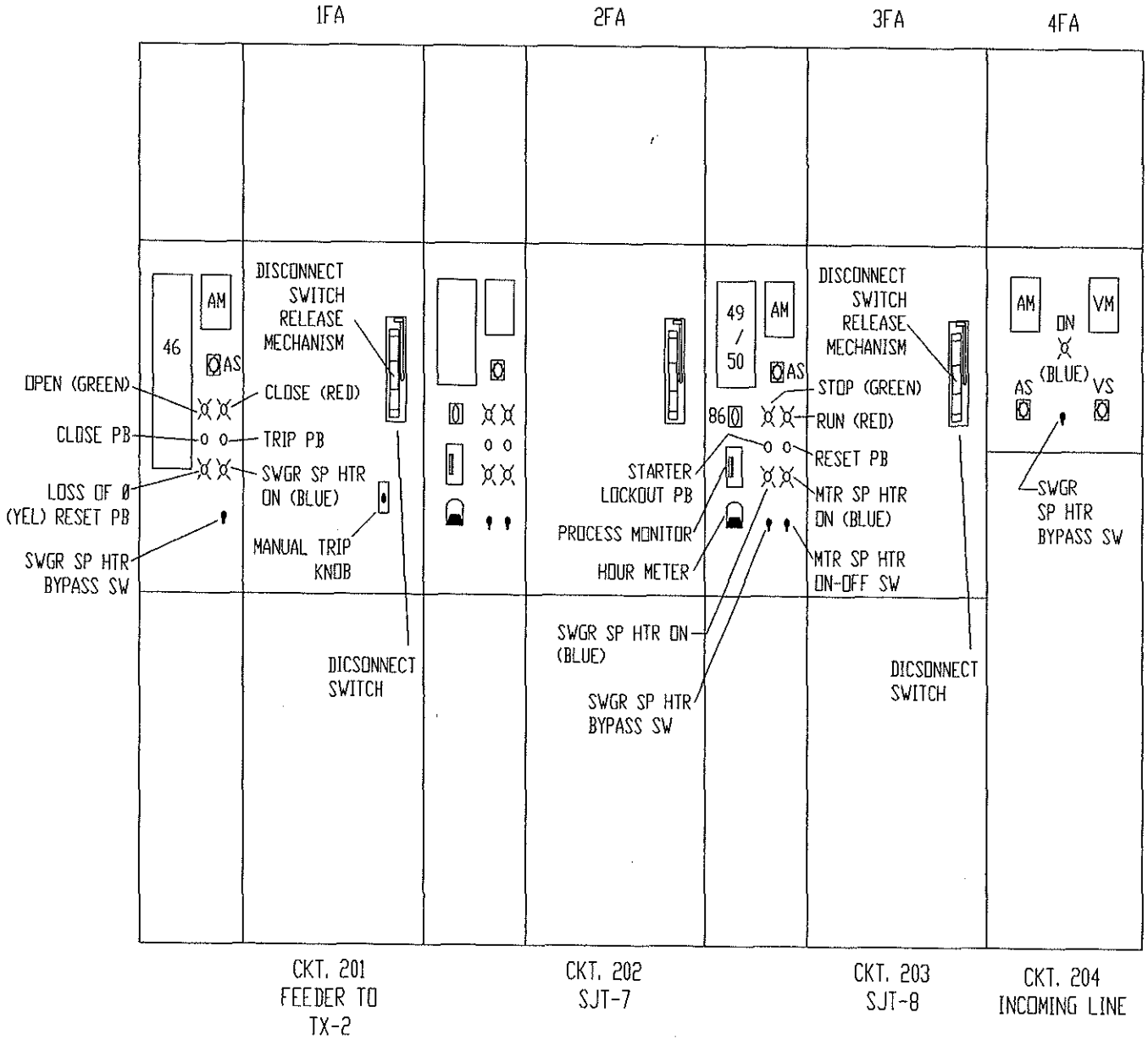

APPENDIX B
ELEVATIONS (Sheet 2)
MCC-B

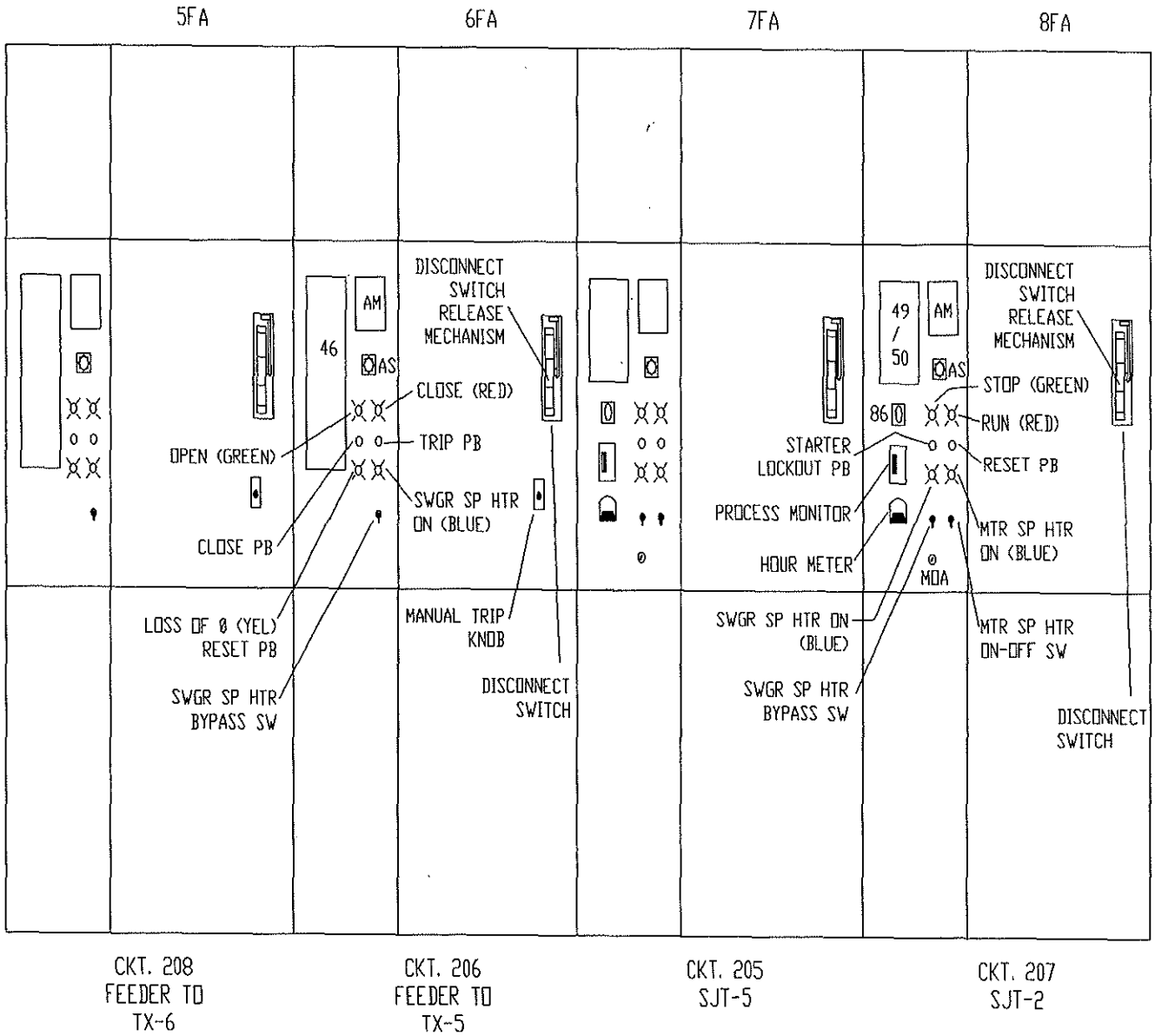

APPENDIX C

ELECTRICAL LOADS
(Sheet 1 of 3)

The following electrical loads will be affected by normal shutdown or automatic shutdown of MCC-B:

SJT-7 Accelerated fill pump.
SJT-8 Accelerated fill pump.
SJT-5 Booster pump.
SJT-2 Booster pump.
Motor Control Center 1B (MCC-1B) via 1000KVA transformer TX-2:
- MCC-1A/1B bus-tie breaker.
- MOV-320-D1.
- MOV-320-D2.
- MOV-420-D2.
- Floodlights.
- Streetlights.
- SJT-20 Drain oil sump pump for tank T-8.
- MOV-T320-2.
- MOV-T220-3.
- MOV-T320-5.
- Control valve 420-D1-C.
- Control valve 520-D1-C.
- MOV-T120-4.
- MOV-K20-7.
- MOV-T120-5.
- MOV-T120-2.
- MOV-CL20-1.
- MOV-CL20-8.
- MOV-WI-20-W3.
- MOV-K20-6.
- SJT-113 Crude oil tank mixer for tank T-3.
- SJT-114 Crude oil tank mixer for tank T-3.
- SJT-115 Crude oil tank mixer for tank T-4.
- SJT-116 Crude oil tank mixer for tank T-4.
- Cathodic protection.
- MOV-K20-2.
- MOV-K20-1.
- MOV-BC-20-W1.
- MOV-K20-8.
- MOV-K20-9.
- MOV-T220-4.
- MOV-T220-5.
- MOV-T120-3.
- MOV-T220-2.
- SJTP-103 Stripping pump for tank T-3.
- MOV-T320-3.

APPENDIX C

ELECTRICAL LOADS
(Sheet 2)

MOV-T320-4.
SJTP-104 Stripping pump for tank T-4.
MOV-420-S1.
MOV-420-S2.
MOV-520-S1.
MOV-520-S2.
Motor Control Center 2 (MCC-2):
- EPP-1 Power panel.
- 5KVA transformer at emergency generator SJEG-10.
- Control building emergency power.
- Maintenance building emergency power.
- Uninterruptible power supply.
- MOV-T320-1.
- MOV-T420-1.
- **Motor Control Center 3E (MCC-3E):**
  - MOV-BC-20-E.
  - MOV-WI-20-B.
  - Radio antenna tower.
  - SJT-22 Slop oil sump pump for tank T-10.
- **Motor Control Center 4E (MCC-4E):**
  - MOV-T120-1.
  - MOV-T220-1.
  - SJT-19 Drain oil sump pump for tank T-7.
- **Motor Control Center 5E (MCC-5E):**
  - Sewage treatment plant no. 2.
  - Lift station no. 2.
  - Permanent facility.
  - LP-5 Lighting panel via 15KVA transformer LT-5.
  - MOV-T520-1.
  - MOV-T620-1.
  - Security Operations Center (SOC).
  - Guardhouse.
  - Streetlights.
  - Cantilever barrier no. 1.
  - Cantilever barrier no. 2.

Motor Control Center 5 (MCC-5) via 750KVA transformer TX-5:
- SJTP-105 Stripping pump for tank T-5.
- Streetlights (North).
- SJTP-106 Stripping pump for tank T-6.
- Cathodic protection rectifier.
- Streetlights (East).
- SJT-119 Crude oil mixer for tank T-5.
- SJT-118 Crude oil mixer for tank T-5.
- SJT-121 Crude oil mixer for tank T-6.
- SJT-122 Crude oil mixer for tank T-6.

APPENDIX C

ELECTRICAL LOADS
(Sheet 3)

Motor Control Center 5A (MCC-5A) via 750KVA transformer TX-5:
SJT-117 Crude oil mixer for tank T-5.
SJT-120 Crude oil mixer for tank T-6.
Spare parts warehouse.
Floodlights.

Motor Control Center 6 (MCC-6) via 500KVA transformer TX-6:
Streetlights.
SJTP-18A Effluent sump pump for waste water treatment.
SJTP-18B Effluent sump pump for waste water treatment.
SJTP-18C Effluent sump pump for waste water treatment.
SJTP-17A Skimmer pump for waste water treatment.
SJTP-17B Skimmer pump for waste water treatment.
Floodlights.
LP-6 Lighting panel.
15KVA transformer for LP-6 lighting panel.
SJTP-15A Oily water lift station pump.
SJTP-15B Oily water lift station pump.
SJTP-15C Oily water lift station pump.
SJTP-16A Oil sump pump.
SJTP-16B Oil sump pump.

NORMAL OPERATING PROCEDURE

SAINT JAMES SITE

480V MOTOR CONTROL CENTER MCC-5

NORMAL OPERATING PROCEDURE

SAINT JAMES SITE

480V MOTOR CONTROL CENTER MCC-5

List of Effective Work Package Pages

Page Number	Revision Number	Page Number	Revision Number
1 thru 13/(14 Blank)	2		

Record of Applicable Technical Directives

None

TABLE OF CONTENTS

Para.	Title	Page
1.	INTRODUCTION	3
1.1	Purpose	3
1.2	Scope	3
1.3	Applicability	3
1.4	Reference Documents	3
2.	PRECAUTIONS AND LIMITATIONS	3
3.	PREREQUISITE ACTIONS	4
4.	NORMAL STARTUP OPERATION OF MCC-5	4
4.1	Startup Preparations	5
4.2	Switching Operations	5
4.3	Monitoring	6
5.	NORMAL SHUTDOWN OPERATION OF MCC-5	6
5.1	Shutdown Preparations	6
5.2	Switching Operations	6
5.3	Verification	7
6.	ISOLATION PROCEDURE OF MCC-5	7
6.1	Coordination of Operations	7
6.2	Switching Operations	7
6.3	Securing the Equipment	8
7.	AUTOMATIC SHUTDOWN OF MCC-5	9
7.1	Shutdown Investigation	9
7.2	Switching and Isolation Operations	10
8.	RECORDS	10
Appendix A	One-Line Diagram	11
Appendix B	Elevation	12
Appendix C	Electrical Loads	13

1. INTRODUCTION.

Motor Control Center No. 5 (MCC-5) is located outdoors in a NEMA type 3R rainproof enclosure west of permanent facility building no. 702. MCC-5 is a 480-volt, three-phase, three-wire system with a 600-ampere bus, 600-ampere frame main breaker with a 600-ampere trip. MCC-5 is fed from 5KV MCC-B (compartment 6FA) via step-down transformer TX-5. MCC-5 is used to distribute 480-volt, three-phase power to the permanent facility building and other 480-volt loads in the area. See Appendixes A, B, and C.

TX-5 is located outdoors by MCC-5. TX-5 is a 4160-480V, delta-wye, 750KVA, step-down transformer with a fused 600-ampere load break disconnect switch on the primary side.

1.1 **Purpose.** This procedure provides step-by-step operations which shall be performed to safely and efficiently operate MCC-5.

1.2 **Scope.** This procedure provides directions to an authorized electrician for the performance of the following activities under normal conditions:

A. Start up MCC-5 and TX-5.

B. Shut down MCC-5.

C. Isolate MCC-5 and TX-5.

D. Investigate an automatic shutdown of MCC-5.

1.3 **Applicability.** The activities described in this procedure shall be performed by an authorized electrician at the request of the supervisor.

1.4 **Reference Documents.**

A. Block Diagram Power Distribution, drawing SJ-E-302-018.

B. One-Line Diagram 5KV MCC-A & MCC-B, drawing SJ-E-302-056.

C. One-Line Diagram 480V MCC-5, 5E, 6, & 5A, drawing SJ-E-302-061.

D. Work package 013 00, 5KV Motor Control Center MCC-B.

E. Work package 024 00, 480V Motor Control Center MCC-5A.

2. PRECAUTIONS AND LIMITATIONS.

The following precautions and limitations apply to the operation of MCC-5 and TX-5:

A. All nonessential personnel shall maintain a minimum distance of 10 feet from MCC-5 and TX-5 when power is first applied, until startup is complete.

B. Use of insulating gloves, protective body gowns, hooded face shields, and insulating floor mats are required during 5KV racking and switching operations.

C. A safety watch shall be stationed within view of the electrician performing 5KV switching operations.

D. The power source for MCC-5 is MCC-B via TX-5. The nominal phase-to-phase voltage from MCC-B is 4160 volts (4000V minimum) and 480 volts (460V to 510V acceptable) from TX-5.

E. If rain is imminent or is falling, the doors to the MCC-5 and TX-5 enclosures shall remain closed to prevent water entry.

3. PREREQUISITE ACTIONS.

The following prerequisite actions shall be accomplished prior to the operation of MCC-5 and TX-5:

A. Review the job safety analysis (JSA), if applicable, on this equipment for potential safety hazards and review associated one-line diagrams with the supervisor.

B. The supervisor shall verify that routine preventive maintenance has been performed on MCC-5, TX-5, and their components as described in the applicable maintenance requirement card (MRC).

C. The operations shift supervisor shall ensure all clearance orders (Safe Work Permits) associated with MCC-5 have been issued.

D. Visually inspect MCC-5, TX-5, and MCC-B (compartment 6FA) for any evidence of moisture, rodents, or other signs of damage. Report same to supervisor.

E. Visually check for any temporary wiring, grounds, locks, or tags. All findings shall be reported to the control room operator and the supervisor.

F. Site operations personnel shall verify equipment status and install or remove locks and tags as necessary.

4. NORMAL STARTUP OPERATION OF MCC-5.

A normal startup operation is performed when 480V power is applied to MCC-5 from MCC-B via TX-5. The following steps shall be executed to complete MCC-5 startup.

4.1 Startup Preparations.

[1] Obtain an electrical switching order (ESO) from the supervisor.

[2] Clear the area around MCC-5, TX-5, and MCC-B of all nonessential personnel until startup is complete.

[3] At MCC-5, verify that all circuit breakers are in the OFF position.

[4] At TX-5, verify that the load break disconnect switch is in the CLOSED position.

[5] At MCC-B (compartment 4FA), using the panel-mounted voltmeter, verify that phase-to-phase bus voltages are nominally 4160 volts. Report any phase-to-phase readings less than 4000 volts to the supervisor.

4.2 Switching Operations.

[1] Notify the control room operator that MCC-5 and TX-5 are being energized.

WARNING 1

Closing the TX-5 feeder contactor at MCC-B (compartment 6FA) will supply 480V power to the line side of the MCC-5A main breaker.

WARNING 2

An electrical fault and flash could cause injury or death to personnel. Use of insulating gloves, protective body gowns, hooded face shields, and insulating floor mats are required during 5KV racking and switching operations.

[2] At MCC-B (compartment 6FA), close the TX-5 feeder contactor as follows:

[a] While standing on an insulating floor mat and to the hinged side of the compartment, depress the disconnect switch release mechanism and rotate the disconnect switch handle to the ON position.

[b] Press the red CLOSE button.

[c] Verify that the red CLOSE indicating light is on.

[3] At MCC-5 (compartment 3FA), using the panel-mounted voltmeter, verify that phase-to-phase voltages are nominally 480 volts (460V to 510V acceptable).

NOTE
TX-5 is now energized.

[4] Notify the control room operator that TX-5 is now energized.

[5] At MCC-5 (compartment 3FC), turn the handle of the MCC-5 main breaker to the ON position.

4.3 Monitoring.

[1] At MCC-5 (compartment 3FA), using the panel-mounted voltmeter, verify that phase-to-phase bus voltages are nominally 480 volts (460V to 510V acceptable).

[2] Using the panel-mounted ammeter, verify that there is no load on MCC-5.

NOTE
MCC-5 is now energized and available for startup of other 480V equipment.

[3] Notify the control room operator that MCC-5 is now energized.

5. NORMAL SHUTDOWN OPERATION OF MCC-5.

A normal shutdown operation is performed when 480V power is removed from MCC-5. The following steps shall be executed to complete MCC-5 shutdown.

NOTE
TX-5 will remain energized.

5.1 Shutdown Preparations.

[1] Obtain an electrical switching order (ESO) from the supervisor.

[2] Clear the area around MCC-5 of all nonessential personnel until shutdown is complete.

[3] At MCC-5, verify that all branch circuits are de-energized by visually checking the position of all branch circuit breakers. Notify the supervisor of any remaining energized circuits.

5.2 Switching Operations.

[1] Notify the control room operator that MCC-5 is being de-energized.

[2] At MCC-5 (compartment 3FA), using the panel-mounted ammeter, verify that there is no load on MCC-5.

[3] At compartment 3FC, turn the handle of the MCC-5 main breaker to the OFF position.

5.3 Verification.

[1] At MCC-5 (compartment 3FA), using the panel-mounted ammeter, verify that there is no load on MCC-5.

NOTE
MCC-5 is now de-energized.

[2] Notify the control room operator that MCC-5 is now de-energized.

6. ISOLATION PROCEDURE OF MCC-5.

Isolation of MCC-5 and TX-5 will prevent normal startup operation of MCC-5 and TX-5. The following steps shall be executed only after MCC-5 shutdown operation (paragraph 5 above) is complete.

6.1 Coordination of Operations.

[1] Obtain an electrical switching order (ESO) from the supervisor.

[2] Notify the control room operator that MCC-5 and TX-5 are being isolated.

6.2 Switching Operations.

[1] Shut down MCC-5A per work package 024 00.

[2] At MCC-B (compartment 6FA), using the panel-mounted ammeter, verify that there is no load on the TX-5 feeder contactor.

WARNING

An electrical fault and flash could cause injury or death to personnel. Use of insulating gloves, protective body gowns, hooded face shields, and insulating floor mats are required during 5KV switching operations.

[3] Trip the TX-5 feeder contactor by pushing the green TRIP button.

NOTE
If the TRIP button does not open the TX-5 feeder contactor, manually open the contactor by pulling the manual trip knob.

[4] Verify that the green OPEN and amber LOSS OF PHASE indicating lights are on and the red CLOSE indicating light is off.

WARNING

An electrical fault and flash could cause injury or death to personnel. Use of insulating gloves, protective body gowns, hooded face shields, and insulating floor mats are required when racking out 5KV contactors.

[5] Rack out the TX-5 feeder contactor as follows:

[a] While standing on an insulating floor mat and to the hinged side of the compartment, depress the disconnect switch release mechanism and rotate the disconnect switch handle to the OFF position.

[b] Verify that the red CLOSE, green OPEN, and amber LOSS OF PHASE indicating lights are off.

NOTE

Control power from LP-1 (MCC-1A compartment 6FC) is still present for the space heater and blue indicating light.

[6] At MCC-5 (compartment 3FA), using the panel-mounted voltmeter, verify that phase-to-phase voltages are zero.

[7] At TX-5, rotate the load break disconnect switch to the OPEN position.

[8] Verify that the TX-5 load break disconnect switch indicator shows DIS SWT OPEN.

NOTE

MCC-5 and TX-5 are now isolated.

[9] Notify the control room operator that MCC-5 and TX-5 are now isolated.

6.3 Securing the Equipment.

WARNING

Failure to lock out the TX-5 feeder contactor at MCC-B (compartment 6FA), the MCC-5 main breaker at MCC-5, and the load break disconnect switch at TX-5 will create a potential hazard for personnel performing maintenance on MCC-5 and TX-5.

[1] At MCC-B (compartment 6FA), attach a lock and tag to the disconnect switch release mechanism of the OFF disconnect switch.

[2] At MCC-5 (compartment 3FC), attach a lock and tag to the handle of the OFF MCC-5 main breaker.

[3] At TX-5, attach a lock and tag to the handle of the load break disconnect switch.

[4] Log all locks and tags installed as part of the isolation procedure.

NOTE 1
MCC-5 and TX-5 are now secured for maintenance.

NOTE 2
The number of each lock and tag as well as the name of the person who installed them shall be entered in the lockout/tagout log.

NOTE 3
A clearance order (Safe Work Permit) shall be obtained from the operations shift supervisor prior to start of work.

[5] Notify the control room operator that MCC-5 and TX-5 are now secured for maintenance.

7. AUTOMATIC SHUTDOWN OF MCC-5.

An automatic shutdown of MCC-5 occurs when protective devices detect an abnormal condition and trip open the TX-5 feeder contactor, the MCC-5 main breaker, or the fuses for the TX-5 load break disconnect switch are blown open. In the event of an automatic shutdown, the following steps shall be executed to assist maintenance personnel in determining the cause of the shutdown.

7.1 Shutdown Investigation.

[1] Notify the control room operator that MCC-5 has automatically shutdown and is being investigated.

WARNING

Due to the unknown nature or exact location of the condition which caused the automatic shutdown, all nonessential personnel shall stay clear of power distribution equipment associated with MCC-5 and TX-5.

[2] Clear the area around MCC-5 and TX-5 of all nonessential personnel until isolation procedure is complete.

[3] Inspect the exterior of MCC-5, TX-5, and MCC-B (compartment 6FA) for any signs of damage or conditions which may affect the system operation.

[4] At MCC-5, record the status of the following items:

[a] Main breaker - on, trip, or off.

[b] Phase-to-phase voltages on the panel-mounted voltmeter.

[c] All branch circuit breakers that have tripped.

[d] Ammeter readings for all phases.

[5] At MCC-B (compartment 6FA), record the status of the following items:

[a] Red, green, amber, and blue indicating lights - on or off.

[b] Ammeter readings for all phases.

[c] Loss of phase relay 46 - tripped or reset.

[6] At TX-5, record the status of the fuses for the load break disconnect switch.

7.2 **Switching and Isolation Operations.**

[1] If the MCC-5 main breaker and TX-5 feeder contactor have both tripped open, then isolate per paragraph 6 above.

[2] If only the MCC-5 main breaker has tripped open, then isolate as follows:

[a] Turn the handle of the MCC-5 main breaker to the OFF position.

[b] Attach a lock and tag to the handle of the MCC-5 main breaker.

[c] Enter the lock and tag into the lockout/tagout log.

[3] If the MCC-5 main breaker is still closed, but the TX-5 feeder contactor at MCC-B has tripped open, then isolate per paragraph 6 above.

[4] If the fuses for the TX-5 load break disconnect switch have blown open, then isolate per paragraph 6 above.

[5] Report all findings and actions taken to the supervisor.

8. **RECORDS.**

A. Any locks or tags attached to or removed from MCC-5, the TX-5 load break disconnect switch, or MCC-B shall be entered in the lockout/tagout log.

B. Any findings of abnormal conditions shall be noted and reported to the control room operator, the supervisor, and the maintenance manager. A work request shall be initiated to correct the problem.

APPENDIX A

ONE-LINE DIAGRAM

MCC-5

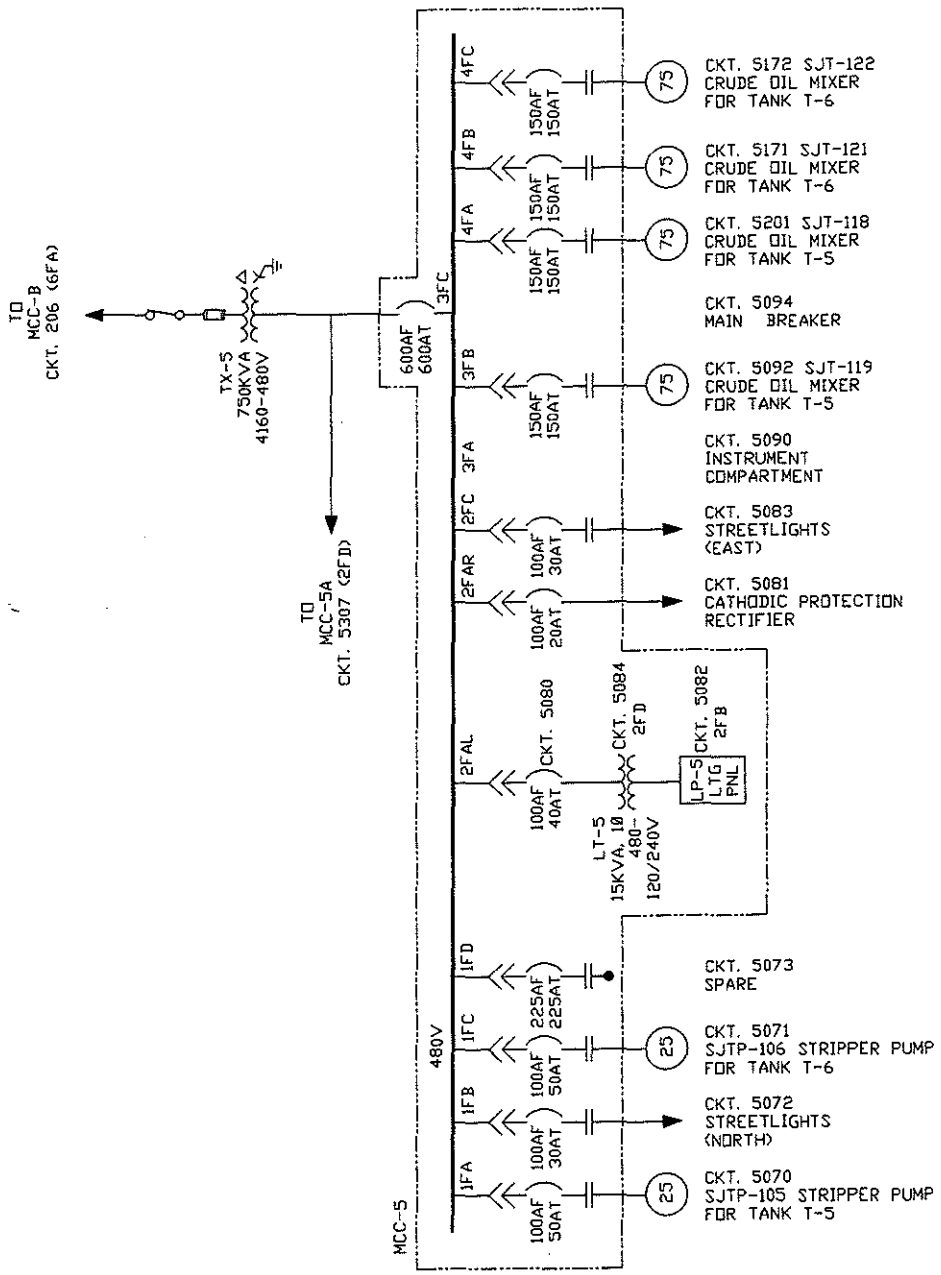

APPENDIX B

ELEVATION

MCC-5

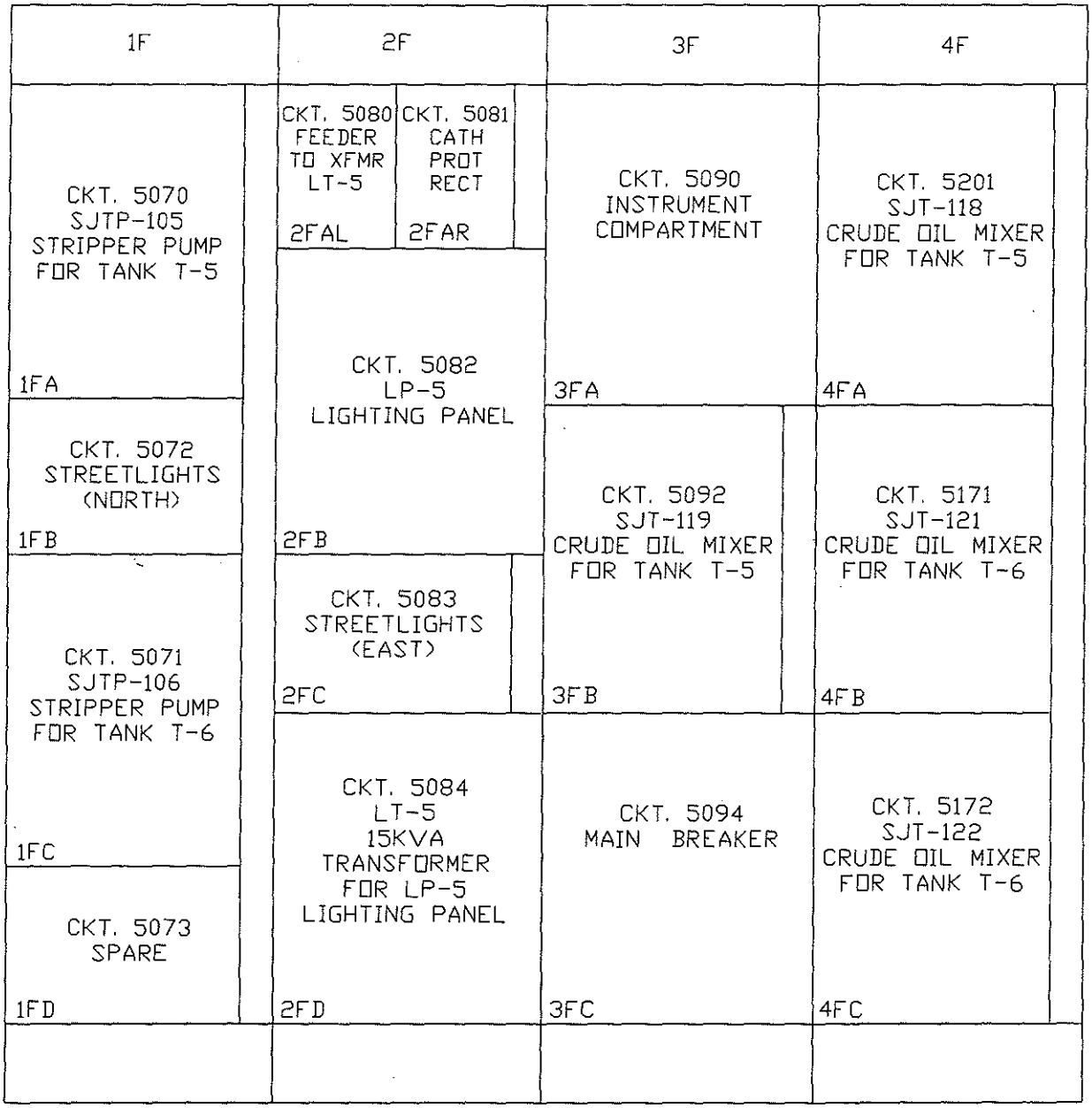

APPENDIX C

ELECTRICAL LOADS

The following list of electrical loads are fed from MCC-5 and will be affected by normal shutdown or automatic shutdown of MCC-5:

SJTP-105 Stripper pump for tank T-5.
Streetlights (North).
SJTP-106 Stripper pump for tank T-6.
Cathodic protection rectifier.
Streetlights (East).
SJT-119 Crude oil mixer for tank T-5.
SJT-118 Crude oil mixer for tank T-5.
SJT-121 Crude oil mixer for tank T-6.
SJT-122 Crude oil mixer for tank T-6.

NORMAL OPERATING PROCEDURE

SAINT JAMES SITE

480V MOTOR CONTROL CENTER MCC-6

NORMAL OPERATING PROCEDURE

SAINT JAMES SITE

480V MOTOR CONTROL CENTER MCC-6

List of Effective Work Package Pages

Page Number	Revision Number	Page Number	Revision Number
1 thru 13/(14 Blank)	2		

Record of Applicable Technical Directives

None

TABLE OF CONTENTS

Para.	Title	Page
1.	INTRODUCTION	3
1.1	Purpose	3
1.2	Scope	3
1.3	Applicability	3
1.4	Reference Documents	3
2.	PRECAUTIONS AND LIMITATIONS	3
3.	PREREQUISITE ACTIONS	4
4.	NORMAL STARTUP OPERATION OF MCC-6	4
4.1	Startup Preparations	4
4.2	Switching Operations	5
4.3	Monitoring	6
5.	NORMAL SHUTDOWN OPERATION OF MCC-6	6
5.1	Shutdown Preparations	6
5.2	Switching Operations	6
5.3	Verification	6
6.	ISOLATION PROCEDURE OF MCC-6	7
6.1	Coordination of Operations	7
6.2	Switching Operations	7
6.3	Securing the Equipment	8
7.	AUTOMATIC SHUTDOWN OF MCC-6	9
7.1	Shutdown Investigation	9
7.2	Switching and Isolation Operations	10
8.	RECORDS	10
Appendix A	One-Line Diagram	11
Appendix B	Elevation	12
Appendix C	Electrical Loads	13

1. INTRODUCTION.

Motor Control Center No. 6 (MCC-6) is located outdoors in a NEMA type 3R rainproof enclosure west of tank T-1. MCC-6 is a 480-volt, three-phase, three-wire system with a 800-ampere bus, and a 600-ampere frame main breaker with a 600-ampere trip. MCC-6 is fed from 5KV MCC-B (compartment 5FA) via step-down transformer TX-6. MCC-6 is used to distribute 480-volt, three-phase power to 480-volt loads. See Appendixes A, B, and C.

TX-6 is located outdoors near MCC-6. TX-6 is a 4160-480V, delta-wye, 500KVA, step-down transformer with a 600-ampere load break disconnect switch on the primary side.

1.1 **Purpose.** This procedure provides step-by-step operations which shall be performed to safely and efficiently operate MCC-6.

1.2 **Scope.** This procedure provides directions to an authorized electrician for the performance of the following activities under normal conditions:

A. Start up MCC-6 and TX-6.

B. Shut down MCC-6.

C. Isolate MCC-6 and TX-6.

D. Investigate an automatic shutdown of MCC-6.

1.3 **Applicability.** The activities described in this procedure shall be performed by an authorized electrician at the request of the supervisor.

1.4 **Reference Documents.**

A. Block Diagram Power Distribution, drawing SJ-E-302-018.

B. One-Line Diagram 5KV MCC-A & MCC-B, drawing SJ-E-302-056.

C. One-Line Diagram 480V MCC-5, 5E, 6, & 5A, drawing SJ-E-302-061.

D. Work package 013 00, 5KV Motor Control Center MCC—B.

2. PRECAUTIONS AND LIMITATIONS.

The following precautions and limitations apply to the operation of MCC-6 and TX-6:

A. All nonessential personnel shall maintain a minimum distance of 10 feet from MCC-6 and TX-6 when power is first applied, until startup is complete.

B. Use of insulating gloves, protective body gowns, hooded face shields, and insulating floor mats are required during 5KV racking and switching operations.

C. A safety watch shall be stationed within view of the electrician performing 5KV switching operations.

D. The power source for MCC-6 is MCC-B via TX-6. The nominal phase-to-phase voltage from MCC-B is 4160 volts (4000V minimum) and 480 volts (460V to 510V acceptable) from TX-6.

E. If rain is imminent or is falling, the doors to the MCC-6 and TX-6 enclosures shall remain closed to prevent water entry.

3. PREREQUISITE ACTIONS.

The following prerequisite actions shall be accomplished prior to the operation of MCC-6 and TX-6:

A. Review the job safety analysis (JSA), if applicable, on this equipment for potential safety hazards and review associated one-line diagrams with the supervisor.

B. The supervisor shall verify that routine preventive maintenance has been performed on MCC-6, TX-6, and their components as described in the applicable maintenance requirement card (MRC).

C. The operations shift supervisor shall ensure all clearance orders (Safe Work Permits) associated with MCC-6 have been issued.

D. Visually inspect MCC-6, TX-6, and MCC-B (compartment 5FA) for any evidence of moisture, rodents, or other signs of damage. Report same to supervisor.

E. Visually check for any temporary wiring, grounds, locks, or tags. All findings shall be reported to the control room operator and the supervisor.

F. Site operations personnel shall verify equipment status and install or remove locks and tags as necessary.

4. NORMAL STARTUP OPERATION OF MCC-6.

A normal startup operation is performed when 480V power is applied to MCC-6 from MCC-B via TX-6. The following steps shall be executed to complete MCC-6 startup.

4.1 Startup Preparations.

[1] Obtain an electrical switching order (ESO) from the supervisor.

[2] Clear the area around MCC-6, TX-6, and MCC-B of all nonessential personnel until startup is complete.

[3] At MCC-6, verify that all circuit breakers are in the OFF position.

[4] At MCC-B (compartment 4FA), using the panel-mounted voltmeter, verify that phase-to-phase bus voltages are nominally 4160 volts. Report any phase-to-phase readings less than 4000 volts to the supervisor.

4.2 Switching Operations.

[1] Notify the control room operator that MCC-6 and TX-6 are being energized.

[2] At TX-6, if applicable, close the load break disconnect swicth as follows:

[a] Rotate the load break disconnect switch to the CLOSED position.

[b] Verify that the load break disconnect switch indicator shows CL.

WARNING

An electrical fault and flash could cause injury or death to personnel. Use of insulating gloves, protective body gowns, hooded face shields, and insulating floor mats are required during 5KV racking and switching operations.

[3] At MCC-B (compartment 5FA), close the TX-6 feeder contactor as follows:

[a] While standing on an insulating floor mat and to the hinged side of the compartment, depress the disconnect switch release mechanism and rotate the disconnect switch handle to the ON position.

[b] Press the red CLOSE button.

[c] Verify that the red CLOSE indicating light is on.

[4] At MCC-6 (compartment 3FA), using the panel-mounted voltmeter, verify that phase-to-phase voltages are nominally 480 volts (460V to 510V acceptable).

NOTE

TX-6 is now energized.

[5] Notify the control room operator that TX-6 is now energized.

[6] At MCC-6 (compartment 3FD), turn the handle of the MCC-6 main breaker to the ON position.

4.3 Monitoring.

[1] At MCC-6 (compartment 3FA), using the panel-mounted voltmeter, verify that phase-to-phase bus voltages are nominally 480 volts (460V to 510V acceptable).

[2] Using the panel-mounted ammeter, verify that there is no load on MCC-6.

NOTE
MCC-6 is now energized and available for startup of other 480V equipment.

[3] Notify the control room operator that MCC-6 is now energized.

5. NORMAL SHUTDOWN OPERATION OF MCC-6.

A normal shutdown operation is performed when 480V power is removed from MCC-6. The following steps shall be executed to complete MCC-6 shutdown.

NOTE
TX-6 will remain energized.

5.1 Shutdown Preparations.

[1] Obtain an electrical switching order (ESO) from the supervisor.

[2] Clear the area around MCC-6 of all nonessential personnel until shutdown is complete.

[3] At MCC-6, verify that all branch circuits are de-energized by visually checking the position of all branch circuit breakers. Notify the supervisor of any remaining energized circuits.

5.2 Switching Operations.

[1] Notify the control room operator that MCC-6 is being de-energized.

[2] At MCC-6 (compartment 3FA), using the panel-mounted ammeter, verify that there is no load on MCC-6.

[3] At compartment 3FD, turn the handle of the MCC-6 main breaker to the OFF position.

5.3 Verification.

[1] At MCC-6 (compartment 3FA), using the panel-mounted ammeter, verify that there is no load on MCC-6.

NOTE
MCC-6 is now de-energized.

[2] Notify the control room operator that MCC-6 is now de-energized.

6. ISOLATION PROCEDURE OF MCC-6.

Isolation of MCC-6 and TX-6 will prevent normal startup operation of MCC-6 and TX-6. The following steps shall be executed only after MCC-6 shutdown operation (paragraph 5 above) is complete.

6.1 Coordination of Operations.

[1] Obtain an electrical switching order (ESO) from the supervisor.

[2] Notify the control room operator that MCC-6 and TX-6 are being isolated.

6.2 Switching Operations.

[1] At MCC-B (compartment 5FA), using the panel-mounted ammeter, verify that there is no load on the TX-6 feeder contactor.

WARNING

An electrical fault and flash could cause injury or death to personnel. Use of insulating gloves, protective body gowns, hooded face shields, and insulating floor mats are required during 5KV switching operations.

[2] Trip the TX-6 feeder contactor by pushing the green TRIP button.

NOTE
If the TRIP button does not open the TX-6 feeder contactor, manually open the contactor by pulling the manual trip knob.

[3] Verify that the green OPEN and amber LOSS OF PHASE indicating lights are on and the red CLOSE indicating light is off.

WARNING

An electrical fault and flash could cause injury or death to personnel. Use of insulating gloves, protective body gowns, hooded face shields, and insulating floor mats are required when racking out 5KV contactors.

[4] Rack out the TX-6 feeder contactor as follows:

[a] While standing on an insulating floor mat and to the hinged side of the compartment, depress the disconnect switch release

mechanism and rotate the disconnect switch handle to the OFF position.

[b] Verify that the red CLOSE, green OPEN, and amber LOSS OF PHASE indicating lights are off.

NOTE

Control power from LP-1 (MCC-1A compartment 6FC) is still present for the space heater and blue indicating light.

[5] At MCC-6 (compartment 3FA), using the panel-mounted voltmeter, verify that phase-to-phase voltages are zero.

[6] At TX-6, rotate the load break disconnect switch to the OPEN position.

[7] Verify that the TX-6 load break disconnect switch indicator shows OP.

NOTE

MCC-6 and TX-6 are now isolated.

[8] Notify the control room operator that MCC-6 and TX-6 are now isolated.

6.3 Securing the Equipment.

WARNING

Failure to lock out the TX-6 feeder contactor and the MCC-6 main breaker will create a potential hazard for personnel performing maintenance on MCC-6 and TX-6.

[1] At MCC-B (compartment 5FA), attach a lock and tag to the disconnect switch release mechanism of the OFF disconnect switch.

[2] At MCC-6 (compartment 3FD), attach a lock and tag to the handle of the OFF MCC-6 main breaker.

[3] Log all locks and tags installed as part of the isolation procedure.

NOTE 1

MCC-6 and TX-6 are now secured for maintenance.

NOTE 2

The number of each lock and tag as well as the name of the person who installed them shall be entered in the lockout/tagout log.

NOTE 3

A clearance order (Safe Work Permit) shall be obtained from the operations shift supervisor prior to start of work.

[4] Notify the control room operator that MCC-6 and TX-6 are now secured for maintenance.

7. AUTOMATIC SHUTDOWN OF MCC-6.

An automatic shutdown of MCC-6 occurs when protective devices detect an abnormal condition and trip open the TX-6 feeder contactor or the MCC-6 main breaker. In the event of an automatic shutdown, the following steps shall be executed to assist maintenance personnel in determining the cause of the shutdown.

7.1 Shutdown Investigation.

[1] Notify the control room operator that MCC-6 has automatically shutdown and is being investigated.

WARNING

Due to the unknown nature or exact location of the condition which caused the automatic shutdown, all nonessential personnel shall stay clear of power distribution equipment associated with MCC-6 and TX-6.

[2] Clear the area around MCC-6 and TX-6 of all nonessential personnel until isolation procedure is complete.

[3] Inspect the exterior of MCC-6, TX-6, and MCC-B (compartment 5FA) for any signs of damage or conditions which may affect the system operation.

[4] At MCC-6, record the status of the following items:

[a] Main breaker - on, trip, or off.

[b] Phase-to-phase voltages on the panel-mounted voltmeter.

[c] All branch circuit breakers that have tripped.

[d] Ammeter readings for all phases.

[5] At MCC-B (compartment 5FA), record the status of the following items:

[a] Red, green, amber, and blue indicating lights - on or off.

[b] Ammeter readings for all phases.

[c] Loss of phase relay 46 - tripped or reset.

7.2 Switching and Isolation Operations.

[1] If the MCC-6 main breaker and TX-6 feeder contactor have both tripped open, then isolate per paragraph 6 above.

[2] If only the MCC-6 main breaker has tripped open, then isolate as follows:

[a] Turn the handle of the MCC-6 main breaker to the OFF position.

[b] Attach a lock and tag to the handle of the MCC-6 main breaker.

[c] Enter the lock and tag into the lockout/tagout log.

[3] If the MCC-6 main breaker is still closed, but the TX-6 feeder contactor at MCC-B has tripped open, then isolate per paragraph 6 above.

[4] Report all findings and actions taken to the supervisor.

8. RECORDS.

A. Any locks or tags attached to or removed from MCC-6 or MCC-B shall be entered in the lockout/tagout log.

B. Any findings of abnormal conditions shall be noted and reported to the control room operator, the supervisor, and the maintenance manager. A work request shall be initiated to correct the problem.

APPENDIX A

ONE-LINE DIAGRAM

MCC-6

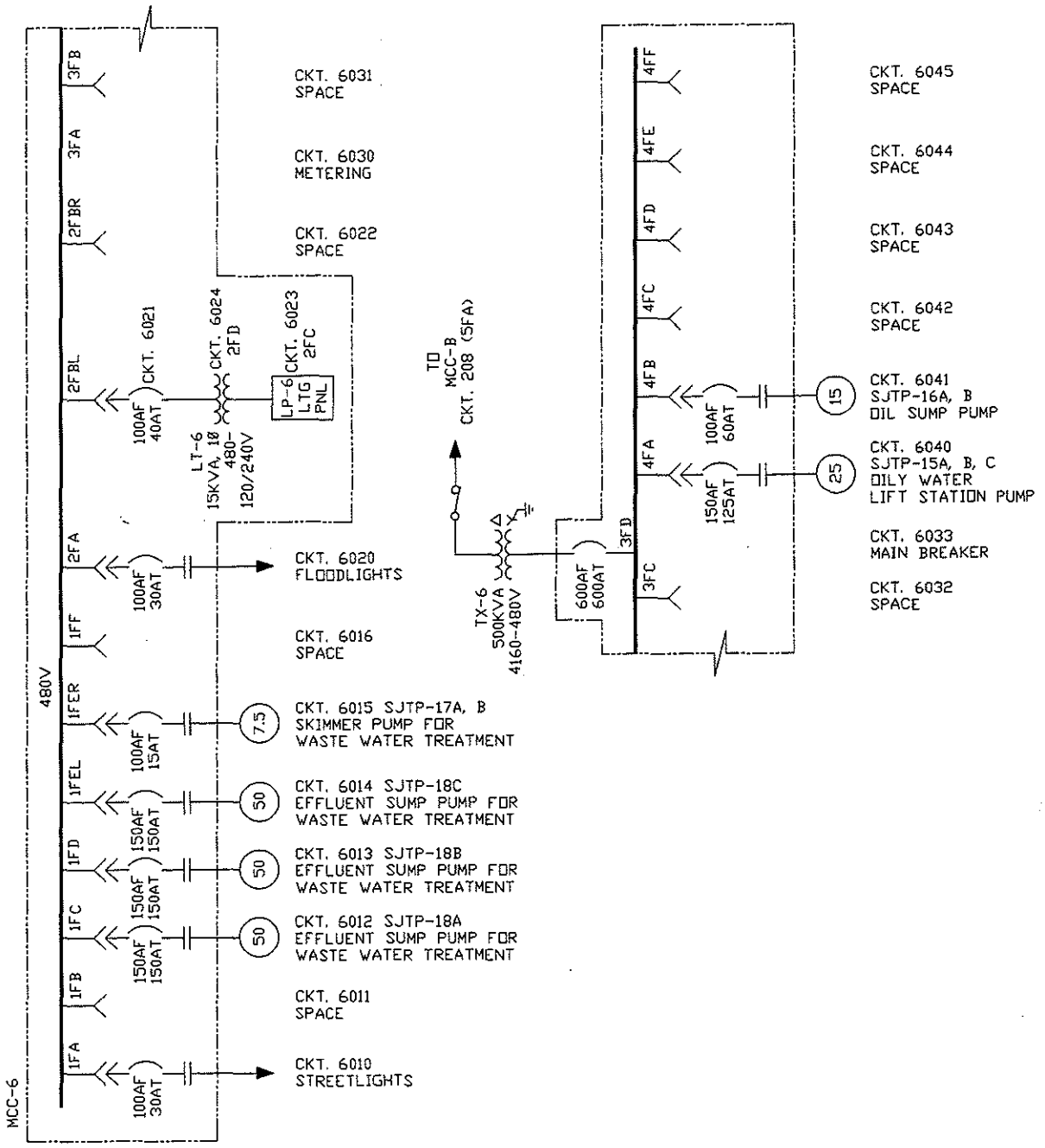

APPENDIX B

ELEVATION

MCC-6

1F	2F	3F	4F
CKT. 6010 STREETLIGHTS 1FA	CKT. 6020 FLOODLIGHTS 2FA	CKT. 6030 METERING 3FA	CKT. 6040 SJTP-15A, B, C OILY WATER LIFT STATION PUMP 4FA
CKT. 6011 SPACE 1FB	CKT. 6021 FEEDER TO XFMR LT-6 2FBL; CKT. 6022 SPACE 2FBR		CKT. 6041 SJTP-16A, B OIL SUMP PUMP 4FB
CKT. 6012 SJTP-18A EFFLUENT SUMP PUMP 1FC	CKT. 6023 LP-6 LIGHTING PANEL 2FC	CKT. 6031 SPACE 3FB	CKT. 6042 SPACE 4FC
CKT. 6013 SJTP-18B EFFLUENT SUMP PUMP 1FD		CKT. 6032 SPACE 3FC	CKT. 6043 SPACE 4FD
CKT. 6014 SJTP-18C EFFLUENT SUMP PUMP 1FEL; CKT. 6015 SJTP-17A SJTP-17B SKIMMER PUMP 1FER	CKT. 6024 LT-6 15KVA TRANSFORMER FOR LP-6 LIGHTING PANEL 2FD	CKT. 6033 MAIN BREAKER 3FD	CKT. 6044 SPACE 4FE
CKT. 6016 SPACE 1FF			CKT. 6045 SPACE 4FF

APPENDIX C

ELECTRICAL LOADS

The following list of electrical loads are fed from MCC-6 and will be affected by normal shutdown or automatic shutdown of MCC-6:

Streetlights.
SJTP-18A Effluent sump pump for waste water treatment.
SJTP-18B Effluent sump pump for waste water treatment.
SJTP-18C Effluent sump pump for waste water treatment.
SJTP-17A Skimmer pump for waste water treatment.
SJTP-17B Skimmer pump for waste water treatment.
Floodlights.
LP-6 Lighting panel.
15KVA transformer for LP-6 lighting panel.
SJTP-15A Oily water lift station pump.
SJTP-15B Oily water lift station pump.
SJTP-15C Oily water lift station pump.
SJTP-16A Oil sump pump.
SJTP-16B Oil sump pump.

NORMAL OPERATING PROCEDURE

SAINT JAMES SITE

EMERGENCY GENERATOR SET SJEG-10

NORMAL OPERATING PROCEDURE

SAINT JAMES SITE

EMERGENCY GENERATOR SET SJEG-10

List of Effective Work Package Pages

Page No.	Chg. No.	Page No.	Chg. No.	Page No.	Chg. No.
1 thru 18	0				

Record of Applicable Technical Directives

None

TABLE OF CONTENTS

Para.	Title	Page
1.	INTRODUCTION	3
1.1	Purpose	3
1.2	Scope	3
1.3	Applicability	4
1.4	Reference Documents	4
2.	PRECAUTIONS AND LIMITATIONS	4
3.	PREREQUISITE ACTIONS	4
4.	MANUAL STARTUP OPERATION OF EMERGENCY GENERATOR SET SJEG-10	5
4.1	Startup Preparations	5
4.2	Switching Operations	6
4.3	Monitoring	6
5.	MANUAL SHUTDOWN OPERATION OF EMERGENCY GENERATOR SET SJEG-10	7
5.1	Shutdown Preparations	7
5.2	Switching Operations	8
5.3	Verification	8
6.	ISOLATION PROCEDURE OF EMERGENCY GENERATOR SET SJEG-10	9
6.1	Switching Operations	9
6.2	Securing the Equipment	9
7.	AUTOMATIC SHUTDOWN OF EMERGENCY GENERATOR SET SJEG-10	10
7.1	Shutdown Investigation	10
7.2	Switching and Isolation Operations	11
8.	AUTOMATIC TRANSFER SWITCH	11
8.1	Preparations	11
8.2	ATS Bypass	11
8.3	ATS Test	12
8.4	ATS Isolate	14
8.5	ATS Reconnection	14
9.	RECORDS	15
Appendix A	Emergency Generator One-Line Diagram	16
Appendix B	SJATS-1 Front Elevation	17
Appendix C	SJEG-10 Front Elevation	18

1. INTRODUCTION.

Emergency generator set SJEG-10 is rated 350KW at a 0.8 power factor and is used to provide 480/277V emergency power to MCC-1B. SJEG-10 provides emergency power via automatic transfer switch SJATS-1. MCC-1B receives normal power from MCC-B (compartment 1FA) via step down transformer TX-2 via SJATS-1. When voltage sensors at SJATS-1 detect a loss of normal power, the control circuit will initiate the start sequence of SJEG-10 and will transfer MCC-1B to emergency power. When normal power from TX-2 is restored, SJATS-1 will transfer MCC-1B to normal power automatically and SJEG-10 will be shut down after a cool down period.

SJEG-10 is located outdoors at the southwest end of building 704. Diesel fuel tanks SJT-123 and EG-1 limit the generator to a run duration of 74 hours. The generator includes a control power transformer (CPT) which feeds a 120-volt power panel and a battery charger for the engine start battery. The CPT receives power from MCC-2 (compartment 1FAR). See Appendix A and C.

SJATS-1 is located in the motor control center room of building 704. SJATS-1 is equipped with a transfer switch rated 1200 amperes at 480 volts, a manual bypass switch, a manual disconnect switch, status indicating lights, and a metering panel. See Appendix B, SJATS-1 Front Elevation.

1.1 **Purpose.** This procedure provides step-by-step operations which shall be performed to safely and efficiently operate the emergency generator set SJEG-10. This procedure also includes the bypass, test, isolation, and reconnection of automatic transfer switch SJATS-1.

1.2 **Scope.** This procedure provides directions to an authorized electrician for the performance of the following activities under normal conditions:

A. Manually start up SJEG-10.

B. Manually shut down SJEG-10.

C. Isolate SJEG-10.

D. Investigate an automatic shutdown of SJEG-10.

E. Bypass, test, isolate, and reconnect SJATS-1.

1.3 **Applicability.** The activities described in this procedure shall be performed by an authorized electrician at the request of the supervisor.

1.4 **Reference Documents.**

A. Block Diagram Power Distribution, drawing SJ-E-302-018.

B. One Line Diagram 5KV MCC-A and MCC-B, drawing SJ-E-302-056.

C. One Line Diagram 480V MCC-1A, drawing SJ-E-302-057.

D. One Line Diagram 480V MCC-1B, drawing SJ-E-302-058.

E. One Line Diagram 480V MCC-2, MCC-3 & 3E, drawing SJ-E-302-059.

F. Work package 017 00, 480V Motor Control Center MCC-1B.

2. PRECAUTIONS AND LIMITATIONS.

The following precautions and limitations apply to the operation of the emergency generator set SJEG-10:

A. All nonessential personnel shall maintain a minimum distance of 10 feet from SJEG-10 when power is first applied, until startup is complete.

B. The normal power source for MCC-1B is MCC-B via TX-2. The emergency power source for MCC-1B is SJEG-10 via SJATS-1. The nominal phase-to-phase voltage from SJEG-10 and TX-2 is 480 volts (460V to 510V acceptable).

C. If rain is imminent or is falling, the doors to the SJEG-10 enclosure shall remain closed to prevent water entry.

3. PREREQUISITE ACTIONS.

The following prerequisite actions shall be accomplished prior to operation of SJEG-10:

A. Review the job safety analysis (JSA), if applicable, on this equipment for potential safety hazards and review associated one-line diagrams with the supervisor.

B. The supervisor shall verify that routine preventive maintenance has been performed on SJEG-10 and SJATS-1 and their components as described in the applicable maintenance requirement card (MRC).

C. The operations shift supervisor shall ensure all clearance orders (Safe Work Permits) associated with SJEG-10 and SJATS-1 have been issued.

D. Visually inspect SJEG-10 and SJATS-1 for any evidence of moisture, rodents, or other signs of damage. Report same to supervisor.

E. Visually check for any temporary wiring, grounds, locks, or tags. All findings shall be reported to the control room operator and the supervisor.

F. Site operations personnel shall verify equipment status and install or remove locks and tags as necessary.

4. MANUAL STARTUP OPERATION OF EMERGENCY GENERATOR SET SJEG-10.

A manual startup operation is performed when 480/277V normal power to MCC-1B is manually disconnected and SJATS-1 automatically starts SJEG-10 and transfers emergency power to MCC-1B. The following steps shall be executed to complete SJEG-10 manual startup.

4.1 Startup Preparations.

[1] Obtain an electrical switching order (ESO) from the supervisor.

[2] At MCC-1 (compartment 9FA), verify that the MCC-1B main breaker status indicator shows CLOSED.

[3] At MCC-1 (compartment 8FA), verify that the MCC-1A/1B bus-tie breaker status indicator shows OPEN.

[4] At SJEG-10, verify that the generator engine control switch is set to the AUTO position.

[5] At SJATS-1, verify that the green NORMAL AVAILABLE and green ATS NORMAL indicating lights are on.

[6] At MCC-B (compartment 1FA), verify that the red CLOSE indicating light is on for the TX-2 feeder contactor.

4.2 Switching Operations.

CAUTION

During the startup of SJEG-10, part of the site will be without power until SJEG-10 comes on line. The switching operation shall be performed after all site personal computers have been turned off.

[1] Notify the control room operator that the MCC-1B main breaker will be de-energized and that SJEG-10 will start automatically.

[2] Wait for a public announcement of the impending temporary power outage. Allow 15 minutes for personnel to prepare for the outage.

[3] At MCC-1 (compartment 9FA), trip open the MCC-1B main breaker by pushing the red TRIP button.

NOTE

When the MCC-1B main breaker is opened, 480V power is lost at the bus. The voltage sensing circuits at SJATS-1 detect the loss of normal power and initiate an automatic startup of SJEG-10. After a short delay, SJATS-1 will switch the 480V output of SJEG-10 to the MCC-1B bus.

4.3 Monitoring.

[1] After SJEG-10 startup, make a visual inspection of the engine and generator. Check for air, water, fuel, or exhaust leaks. Also check for any loose wires, excessive vibration, or unusual noises.

[2] At SJEG-10, using the panel-mounted voltmeter, verify that phase-to-phase voltages are nominally 480 volts (460V to 510V acceptable).

[3] Using the panel-mounted ammeter, verify that the amperage is under 527 amperes.

[4] Verify that all indicating lights are off. Notify the supervisor of any illuminated indicating lights.

[5] At SJATS-1, verify that the red EMERGENCY AVAILABLE and red ATS EMERGENCY indicating lights are on and the green NORMAL AVAILABLE and green ATS NORMAL indicating lights are off.

[6] Using the panel-mounted voltmeter, verify that phase-to-phase voltages are nominally 480 volts (460V to 510V acceptable).

[7] Using the panel-mounted ammeter, verify that the amperage is acceptable.

NOTE

MCC-1B is now being fed from SJEG-10. The total load shall not exceed the generator nameplate rating of 350KW or 527 amperes at a 0.8 power factor.

[8] Notify the control room operator that the MCC-1B main breaker is now de-energized and SJEG-10 is now supplying power to MCC-1B.

[9] Let the SJEG-10 engine run for at least 60 minutes under load.

NOTE

If an unscheduled interruption of normal power occurs, the emergency generator will start automatically. SJEG-10 shall be monitored in the same manner as described in paragraph 4.3 herein.

5. MANUAL SHUTDOWN OPERATION OF EMERGENCY GENERATOR SET SJEG-10.

A manual shutdown operation is performed when normal 480/277V power is restored to MCC-1B and emergency backup power from SJEG-10 is removed via SJATS-1.

5.1 Shutdown Preparations.

[1] Obtain an electrical switching order (ESO) from the supervisor.

[2] At SJEG-10, verify that the generator engine control switch is set to the AUTO position.

[3] At MCC-B (compartment 1FA), verify that the red CLOSE indicating light is on for the TX-2 feeder contactor.

5.2 Switching Operations.

[1] Notify the control room operator that MCC-1B main breaker is being energized and SJEG-10 is being shutdown.

[2] At MCC-1 (compartment 9FA), rotate the breaker charging handle counterclockwise 180 degrees and return to its center position. The charge status indicator will show CHARGED.

[3] Press the black CLOSE button. The breaker status indictor will show CLOSED and the charge status indicator will show DISCHARGED.

NOTE 1

When the MCC-1B main breaker is closed, 480V normal power is restored at automatic transfer switch SJATS-1. The voltage sensing circuits at SJATS-1 will detect that normal power has been restored and, after a short time delay, initiate the automatic transfer of MCC-1B to its normal source of power.

NOTE 2

SJEG-10 will automatically shut down approximately 8-minutes after SJATS-1 has transferred to its normal power source. This 8-minute run time is necessary to cool down the engine.

5.3 Verification.

[1] At SJEG-10, visually check that the SJEG-10 engine has shut down.

[2] Using the panel-mounted voltmeter, verify that phase-to-phase voltages are zero.

[3] Verify that the generator engine control switch is in the AUTO position.

[4] At SJATS-1, verify that the green NORMAL AVAILABLE and green ATS NORMAL indicating lights are on.

[5] Using the panel-mounted voltmeter, verify that phase-to-phase voltages are nominally 480 volts (460V to 510V acceptable).

[6] Notify the control room operator that the generator is shutdown and that normal power has been restored to MCC-1B.

6. ISOLATION PROCEDURE OF EMERGENCY GENERATOR SET SJEG-10.

Isolation of emergency generator set SJEG-10 will prevent normal startup operation of SJEG-10. The following steps shall be executed only after SJEG-10 manual shutdown operation (paragraph 5 above) is complete.

6.1 Switching Operations.

[1] Obtain an electrical switching order (ESO) from the supervisor.

[2] Notify the control room operator that SJEG-10 is being isolated.

[3] At SJEG-10, set the generator engine control switch to the OFF position.

[4] Move the handle of output breaker to the OFF position.

[5] At MCC-2 (compartment 1FAR), turn the handle of the EMER GEN PWR TRANS feeder breaker to the OFF position.

NOTE

The CPT, battery charger, and control circuits for SJEG-10 are now de-energized.

[6] At SJEG-10, disconnect the engine start battery.

6.2 Securing the Equipment.

[1] At SJEG-10, attach a lock and tag to the positive battery cable.

[2] At MCC-2 (compartment 1FAR), attach a lock and tag to the handle of the OFF EMER GEN PWR feeder breaker.

[3] Log all locks and tags installed as part of the isolation procedure.

[4] Bypass and isolate the automatic transfer switch SJATS-1 as described in section 8 if necessary.

NOTE 1

SJEG-10 is now secured for maintenance.

NOTE 2

The number of each lock and tag as well as the name of the person who installed them shall be entered in the lockout/tagout log.

NOTE 3

A clearance order (Safe Work Permit) shall be obtained from the operations shift supervisor prior to start of work.

[5] Notify the control room operator that SJEG-10 is now secured for maintenance.

7. AUTOMATIC SHUTDOWN OF SJEG-10.

An automatic shutdown of SJEG-10 occurs when protective devices detect an abnormal condition and trip open the SJEG-10 output breaker. In the event of an automatic shutdown, the following steps shall be executed to assist maintenance personnel in determining the cause of the shutdown.

7.1 Shutdown Investigation.

[1] Notify the control room operator that SJEG-10 has automatically shut down and is being investigated.

WARNING

Due to the unknown nature or exact location of the condition which caused the automatic shutdown, all nonessential personnel shall stay clear of power distribution equipment associated with SJEG-10.

[2] Clear the area around SJEG-10 of all nonessential personnel until isolation procedure is complete.

[3] Inspect SJEG-10 for any signs of damage or conditions which may affect the system operation.

[4] At SJEG-10, record the status of the following items:

[a] All indicating lights - on or off.

[b] Output breaker - on, trip or off.

[c] Diesel fuel available.

[5] At MCC-2 (compartment 1FAR), record the status of the EMEG GEN PWR TRANS feeder breaker - on, trip, or off.

[6] At SJATS-1, record the status of the following items:

[a] All indicating lights - on or off.

[b] Phase-to-phase voltages on the panel-mounted voltmeter.

[c] Ammeter readings for all phases.

[d] Hertz reading on the frequency meter.

[7] At SJAPEG-10, record all generator status indicating lights that are on.

[8] Obtain the data log from the DCS printout in the control room to establish the time of SJEG-10 shutdown.

7.2 Switching and Isolation Operations.

[1] If the SJEG-10 output breaker has tripped open, then isolate per paragraph 6 above.

[2] Report all findings and actions taken to the supervisor.

8. AUTOMATIC TRANSFER SWITCH.

The following steps shall be performed in order to bypass, isolate, test, and reconnect automatic transfer switch SJATS-1.

8.1 Preparations.

[1] Obtain an electrical switching order (ESO) from the supervisor.

[2] At SJATS-1, verify that the green NORMAL AVAILABLE and green ATS NORMAL indicating lights are on.

[3] Notify the control room operator of actions to be performed.

8.2 ATS Bypass. The following steps shall be performed to bypass SJATS-1:

CAUTION

When opening the front doors to SJATS-1, open carefully to prevent damage to the relays mounted inside.

[1] Open the door to the SJATS-1 lower cabinet.

NOTE

The crank mechanism and the disconnect switch are located in the lower cabinet of SJATS-1. See Appendix B.

[2] Turn the ATS disconnect switch to the OFF position.

[3] Verify that the following SJATS-1 indicating lights are on:

[a] NORMAL AVAILABLE - green.

[b] ATS INHIBIT - red.

[c] DISCONNECT SWITCH INHIBIT POSITION - red flashing.

[d] ATS NORMAL - green.

[4] At SJATS-1 upper cabinet, turn the BYPASS SELECTOR SWITCH to the NORMAL position. The status of all indicating lights will remain unchanged.

[5] Rotate the MANUAL BYPASS handle to the BYPASS position.

[6] Verify that the green BYPASS NORMAL indicating light is on.

NOTE

SJATS-1 is now in normal bypass and MCC-1B is receiving normal power from transformer TX-2. If normal power is lost, SJATS-1 will not transfer automatically as long as the ATS disconnect switch is in the OFF position.

8.3 **ATS Test.** The following steps shall be performed to test SJATS-1 after it has been bypassed:

[1] At SJATS-1, using the crank handle located in the bottom half of the cabinet, manually turn the SJATS-1 crank mechanism counterclockwise to the TEST position.

NOTE

The switch position indicator is located on the left side of the SJATS-1 lower cabinet and should now point to TEST.

[2] Remove the crank handle and store it on the shelf in the lower cabinet.

[3] Verify that the amber ATS TEST indicating light is on.

[4] Turn the disconnect switch to the ON position.

[5] Verify that the following SJATS-1 indicating lights are on:

[a] NORMAL AVAILABLE - green.

[b] BYPASS NORMAL - green.

[c] ATS TEST - amber.

[d] ATS INHIBIT - red.

[e] ATS NORMAL - green.

CAUTION

When closing the front doors to SJATS-1, close carefully to prevent damage to the relays mounted inside.

[6] Close the door to the SJATS-1 lower cabinet.

[7] Depress and hold the PRESS TO TEST pushbutton until transfer is made. The red ATS EMERGENCY indicating light on the lower cabinet will be lit when transfer is made.

NOTE

Emergency generator set SJEG-10 will start when the test pushbutton is depressed. After power transfer is complete, the time delay relay will be activated, allowing a short run time. Afterwards the automatic transfer switch will transfer back to normal. This will activate the engine over-run relay which allows approximately 8 minutes of run time in a cool down mode. After the cool down period, the generator will shut down automatically.

[8] Verify that the following SJATS-1 indicating lights are on:

[a] NORMAL AVAILABLE - green.

[b] EMERGENCY AVAILABLE - red (when generator starts).

[c] BYPASS NORMAL - green.

[d] ATS TEST - amber.

[e] ATS INHIBIT - red.

[f] ATS EMERGENCY - red.

8.4 **ATS Isolate.** The following steps shall be performed to isolate SJATS-1 after it has been bypassed:

[1] At SJATS-1, turn the disconnect switch to the OFF position.

[2] Manually turn the SJATS-1 crank mechanism counterclockwise to the ISOLATE position.

[3] Remove the crank handle and store it on the shelf in the lower cabinet.

CAUTION

When closing the front doors to SJATS-1, close carefully to prevent damage to the relays mounted inside.

[4] Close the door to the SJATS-1 lower cabinet.

[5] Verify the following SJATS-1 indicating lights are on:

[a] NORMAL AVAILABLE - green.

[b] BYPASS NORMAL - green.

[c] ATS ISOLATED - amber.

[d] ATS INHIBIT - red.

[e] DISCONNECT SWITCH INHIBIT POSITION - flashing red.

NOTE

When SJATS-1 is in ISOLATE position, the bypass switch becomes a manual transfer switch to either normal or emergency power source.

8.5 **ATS Reconnection.** The following steps shall be performed to reconnect SJATS-1 for normal service:

[1] Turn the disconnect switch to the OFF position.

[2] Manually turn the SJATS-1 crank mechanism clockwise to the TEST position.

[3] Turn the disconnect switch to the ON position.

[4] Depress and hold the PRESS TO TEST pushbutton until transfer is made.

[5] Turn the disconnect switch to the OFF position.

[6] Manually turn the SJATS-1 crank mechanism clockwise to the AUTO position.

[7] Rotate the MANUAL BYPASS handle to the OPEN position.

[8] Turn the BYPASS SELECTOR SWITCH to the NORMAL position.

[9] Turn the disconnect switch to the ON position.

[10] Notify the control room operator that SJATS-1 is returned to service.

9. **RECORDS.**

A. Any lock or tag attached to or removed from SJEG-10 and its associated equipment shall be entered in the lockout/tagout log.

B. Any findings of abnormal conditions shall be noted and reported to the control room operator, the supervisor, and the maintenance manager. A work request will be initiated to correct the problem.

C. All readings obtained during the weekly test run of SJEG-10 shall be recorded and reported to the supervisor.

APPENDIX A

EMERGENCY GENERATOR ONE-LINE DIAGRAM

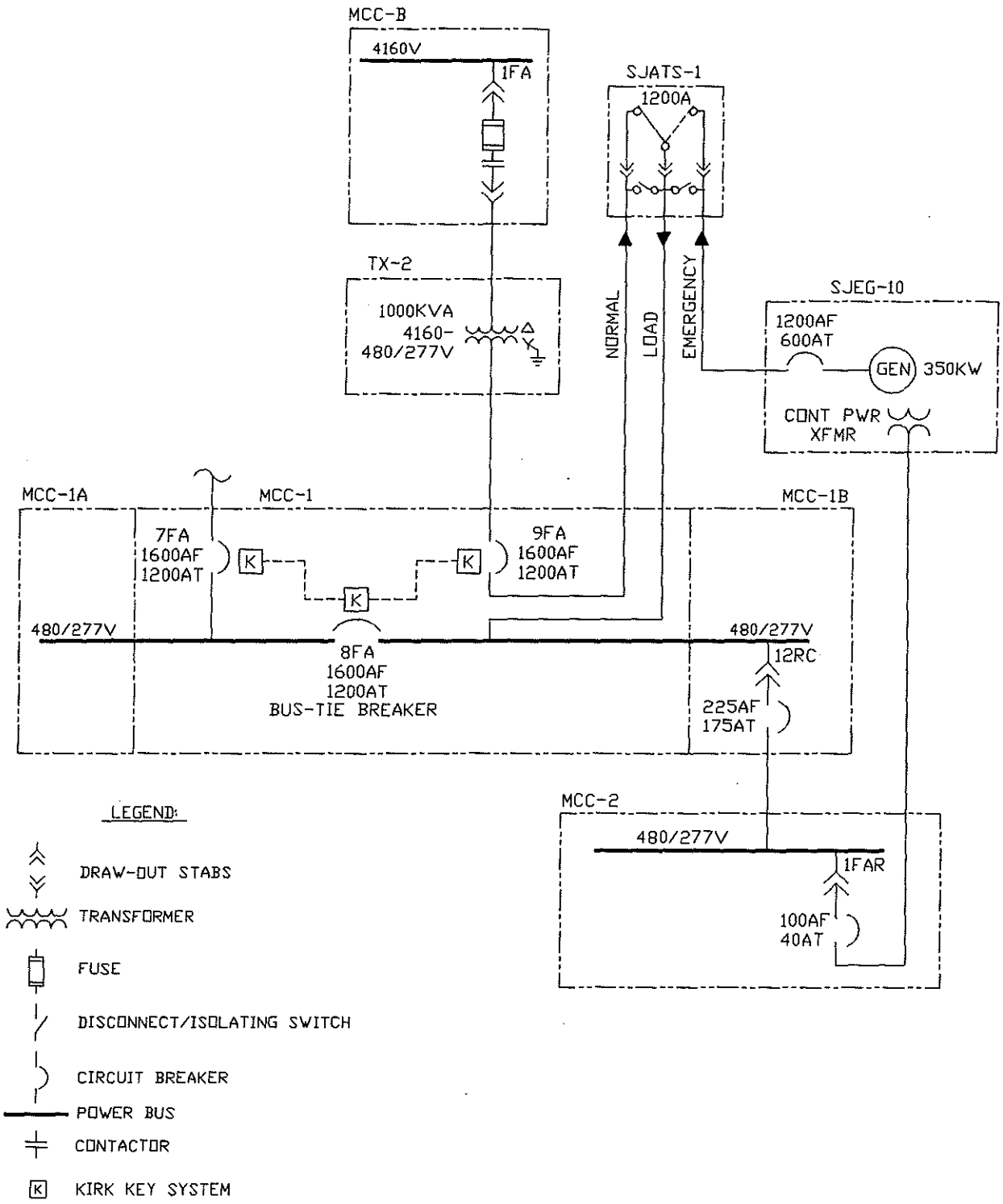

APPENDIX B

SJATS-1 FRONT ELEVATION

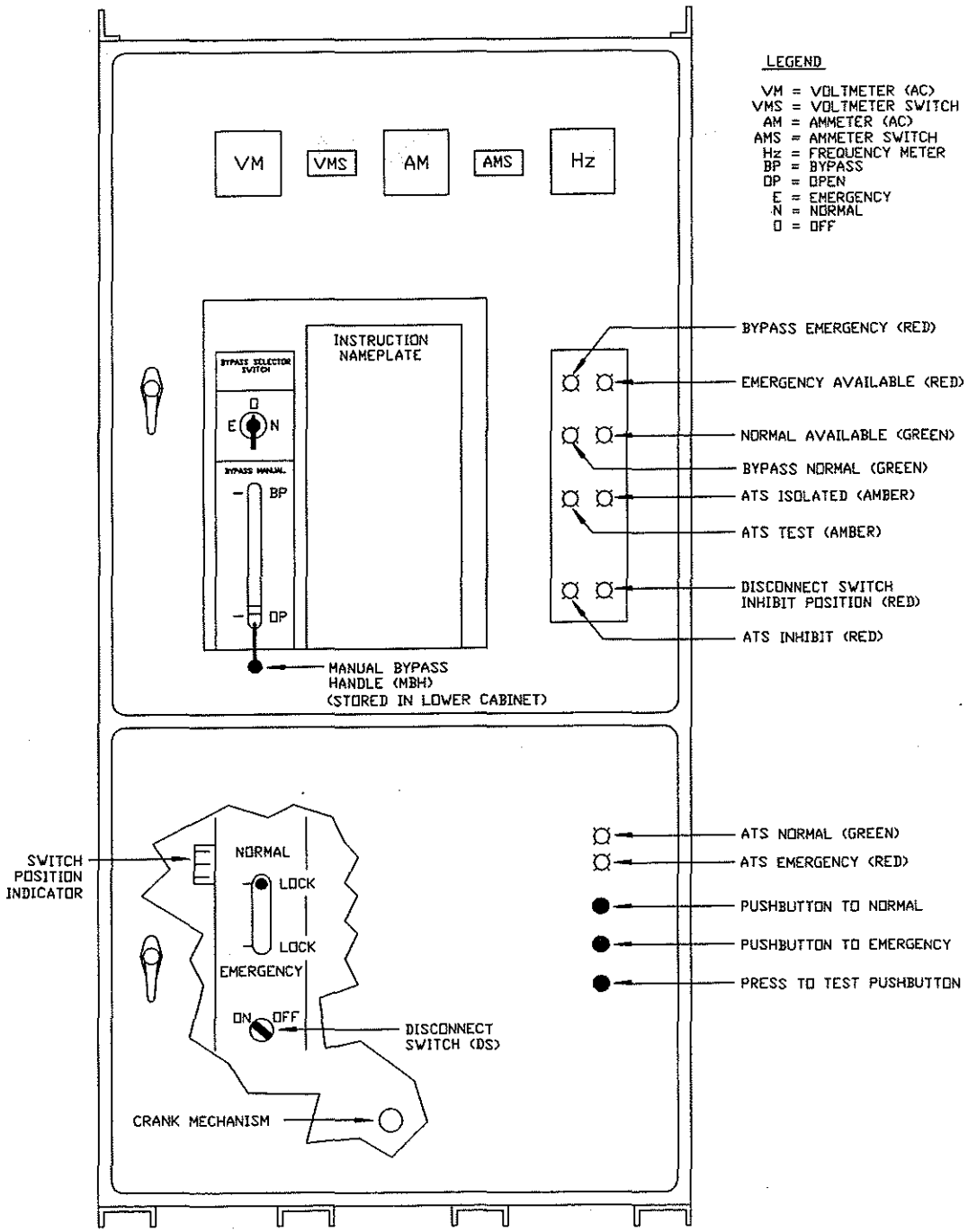

APPENDIX C

SJEG-10 FRONT ELEVATION

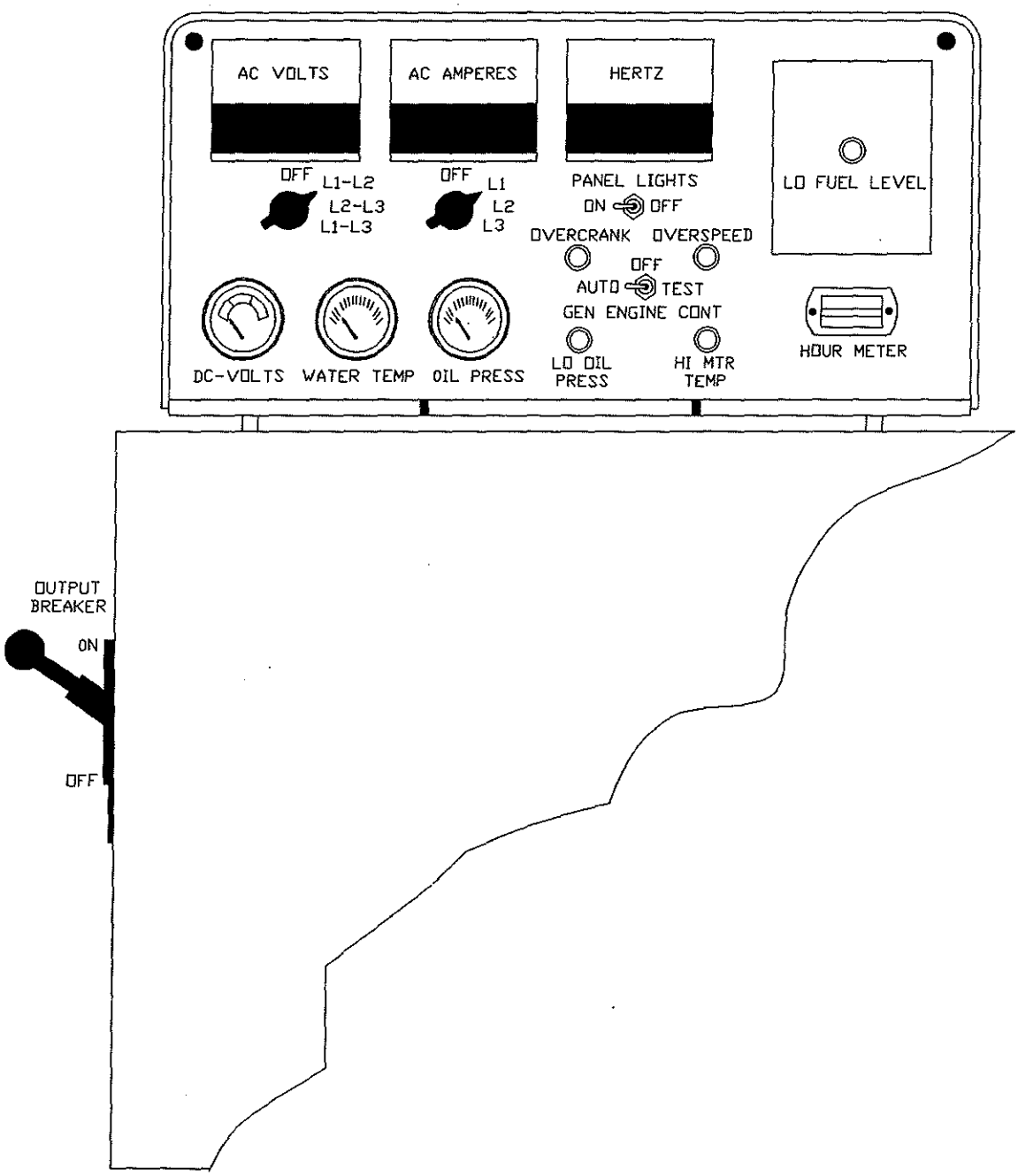

NORMAL OPERATING PROCEDURE

SAINT JAMES SITE

480V MOTOR CONTROL CENTER MCC-1B

NORMAL OPERATING PROCEDURE

SAINT JAMES SITE

480V MOTOR CONTROL CENTER MCC-1B

List of Effective Work Package Pages

Page Number	Revision Number	Page Number	Revision Number
1 thru 19/(20 Blank)	2		

Record of Applicable Technical Directives

None

TABLE OF CONTENTS

Para.	Title	Page
1.	INTRODUCTION	3
1.1	Purpose	3
1.2	Scope	3
1.3	Applicability	3
1.4	Reference Documents	3
2.	PRECAUTIONS AND LIMITATIONS	4
3.	PREREQUISITE ACTIONS	4
4.	NORMAL STARTUP OPERATION OF MCC-1B	5
4.1	Startup Preparations	5
4.2	Switching Operations	5
4.3	Monitoring	6
5.	NORMAL SHUTDOWN OPERATION OF MCC-1B	6
5.1	Shutdown Preparations	7
5.2	Switching Operations	7
5.3	Verification	7
6.	ISOLATION PROCEDURE OF MCC-1B	7
6.1	Coordination of Operations	8
6.2	Switching Operations	8
6.3	Securing the Equipment	9
7.	AUTOMATIC SHUTDOWN OF MCC-1B	10
7.1	Shutdown Investigation	10
7.2	Switching and Isolation Operations	11
8.	RECORDS	12
Appendix A	-One-Line Diagrams	13
Appendix B	-Elevations	16
-Appendix C	Electrical Loads-	18

1. INTRODUCTION.

Motor Control Center No. 1B (MCC-1B) is located in the motor control center room of building 704. MCC-1B is a 480/277-volt, three-phase, four-wire system with a 1600-ampere bus, and a 1600-ampere frame main breaker with a 1200-ampere trip. MCC-1B receives normal power from 5KV MCC-B (compartment 1FA) via step-down transformer TX-2 and emergency power from emergency generator SJEG-10 through automatic transfer switch SJATS-1. An alternate source of power is available from 480V MCC-1A via a normally open bus-tie breaker. MCC-1B is used to distribute 480-volt, three-phase power to MCC-2 and other 480-volt loads. See Appendixes A, B, C, and D.

The MCC-1B main breaker is equipped with a kirk key interlock system which prevents the MCC-1B main breaker, the MCC-1A main breaker, and the MCC-1A/1B bus-tie breaker from being closed, simultaneously. Only one main breaker may be closed while the bus-tie breaker is closed.

TX-2 is located outdoors at the southwest end of building 704. It is a 4160-480/277V, delta-wye, 1000KVA, step-down transformer.

1.1 **Purpose.** This procedure provides step-by-step operations which shall be performed to safely and efficiently operate MCC-1B.

1.2 **Scope.** This procedure provides directions to an authorized electrician for the performance of the following activities under normal conditions:

A. Start up MCC-1B and TX-2.

B. Shut down MCC-1B.

C. Isolate MCC-1B and TX-2.

D. Investigate an automatic shutdown of MCC-1B.

1.3 **Applicability.** The activities described in this procedure shall be performed by an authorized electrician at the request of the supervisor.

1.4 **Reference Documents.**

A. Block Diagram Power Distribution, drawing SJ-E-302-018.

B. One-Line Diagram 5KV MCC-A & MCC-B, drawing SJ-E-302-056.

C. One-Line Diagram 480V MCC-1B, drawing SJ-E-302-058.

D. Work package 013 00, 5KV Motor Control Center MCC-B.

E. Work package 016 00, Emergency Generator Set SJEG-10.

F. Work package 018 00, 480V MCC-1A/MCC-1B Bus-Tie Breaker.

G. Work package 023 00, Uninterruptible Power Supply System.

2. **PRECAUTIONS AND LIMITATIONS.**

The following precautions and limitations apply to the operation of MCC-1B and TX-2:

A. All nonessential personnel shall maintain a minimum distance of 10 feet from MCC-1B and TX-2 when power is first applied, until startup is complete.

B. Use of insulating gloves, protective body gowns, hooded face shields, and insulating floor mats are required during 5KV racking or switching operations.

C. A safety watch shall be stationed within view of the electrician performing 5KV switching operations.

D. The possible power sources for MCC-1B are MCC-B via TX-2, emergency generator SJEG-10 via SJATS-1, or MCC-1A through the MCC-1A/1B bus-tie breaker. The nominal phase-to-phase voltage from MCC-B is 4160 volts (4000V minimum) and 480 volts (460V to 510V acceptable) from TX-2, MCC-1A, and SJEG-10.

E. If rain is imminent or is falling, the doors to the TX-2 enclosure shall remain closed to prevent water entry.

3. **PREREQUISITE ACTIONS.**

The following prerequisite actions shall be accomplished prior to the operation of MCC-1B and TX-2:

A. Review the job safety analysis (JSA), if applicable, on this equipment for potential safety hazards and review associated one-line diagrams with the supervisor.

B. The supervisor shall verify that routine preventive maintenance has been performed on MCC-1B, TX-2, and their components as described in the applicable maintenance requirement card (MRC).

C. The operations shift supervisor shall ensure all clearance orders (Safe Work Permits) associated with MCC-1B and TX-2 have been issued.

D. Visually inspect MCC-1B, TX-2, and MCC-B (compartment 1FA) for any evidence of moisture, rodents, or other signs of damage. Report same to supervisor.

E. Visually check for any temporary wiring, grounds, locks, or tags. All findings shall be reported to the control room operator and the supervisor.

F. Site operations personnel shall verify equipment status and install or remove locks and tags as necessary.

4. NORMAL STARTUP OPERATION OF MCC-1B.

A normal startup operation is performed when 480V power is applied to MCC-1B from MCC-B via TX-2, and emergency generator SJEG-10 is not running. The following steps shall be executed to complete MCC-1B startup.

4.1 Startup Preparations.

[1] Obtain an electrical switching order (ESO) from the supervisor.

[2] Clear the area around MCC-1B, TX-2, and MCC-B of all nonessential personnel until startup is complete.

[3] At MCC-1 (compartment 9FA), verify that the MCC-1B main breaker status indicator shows OPEN.

[4] At compartment 8FA, verify that the MCC-1A/1B bus-tie breaker status indicator shows OPEN.

[5] At MCC-1B, verify that all branch circuit breakers are in the OFF position.

[6] At MCC-B (compartment 4FA), using the panel-mounted voltmeter, verify that phase-to-phase bus voltages are nominally 4160 volts. Report any phase-to-phase readings less than 4000 volts to the supervisor.

4.2 Switching Operations.

[1] Notify the control room operator that MCC-1B and TX-2 are being energized.

WARNING

An electrical fault and flash could cause injury or death to personnel. Use of insulating gloves, protective body gowns, hooded face shields, and insulating floor mats are required during 5KV racking and switching operations.

[2] At MCC-B (compartment 1FA), close the TX-2 feeder contactor as follows:

[a] While standing on an insulating floor mat and to the hinged side of the compartment, depress the disconnect switch release mechanism and rotate the disconnect switch handle to the ON position.

[b] Press the red CLOSE button.

[c] Verify that the red CLOSE indicating light is on.

[3] At MCC-1 (compartment 9FA), using the panel-mounted voltmeter, verify that phase-to-phase voltages are nominally 480 volts (460V to 510V acceptable).

NOTE
TX-2 is now energized.

[4] Notify the control room operator that TX-2 is now energized.

[5] At compartment 9FA, verify that the MCC-1B main breaker kirk key interlock is in the closed (key seized) position.

[6] Rotate the breaker charging handle counterclockwise 180 degrees and return to its center position. The charge status indicator will show CHARGED.

[7] Press the black CLOSE button.

4.3 **Monitoring.**

[1] At MCC-1 (compartment 9FA), using the panel-mounted voltmeter, verify that phase-to-phase bus voltages are nominally 480 volts (460V to 510V acceptable).

[2] Verify that the MCC-1B main breaker status indicator shows CLOSED and the charge status indicator shows DISCHARGED.

[3] Using the panel-mounted ammeter, verify that there is no load on MCC-1B.

NOTE
MCC-1B is now energized and available for startup of other 480V equipment.

[4] Notify the control room operator that MCC-1B is now energized.

[5] If required, close the MCC-1A/1B bus-tie breaker per work package 018 00.

5. NORMAL SHUTDOWN OPERATION OF MCC-1B.

A normal shutdown operation is performed when 480V power is removed from MCC-1B, and emergency generator SJEG-10 and automatic transfer switch SJATS-1 are isolated. The DCS and other critical loads will be powered by the UPS system until power is restored to MCC-1B or the battery bank is depleted. The following steps shall be executed to complete MCC-1B shutdown.

NOTE
TX-2 will remain energized.

5.1 Shutdown Preparations.

[1] Obtain an electrical switching order (ESO) from the supervisor.

[2] Clear the area around MCC-1B of all nonessential personnel until shutdown is complete.

[3] At MCC-1 (compartment 8FA), verify that the MCC-1A/1B bus-tie breaker status indicator shows OPEN.

[4] Shut down MCC-2 per work package 019 00.

[5] At MCC-1B, verify that all branch circuits are de-energized by visually checking the position of all branch circuit breakers. Notify the supervisor of any remaining energized circuits.

[6] At SJATS-1, verify that SJATS-1 indicates NORMAL AVAILABLE.

5.2 Switching Operations.

[1] Notify the control room operator that MCC-1B is being de-energized and that emergency generator SJEG-10 and automatic transfer switch SJATS-1 are being isolated.

[2] Isolate SJEG-10 and SJATS-1 per work package 016 00.

[3] At MCC-1 (compartment 9FA), using the panel-mounted ammeter, verify that there is no load on MCC-1B.

[4] Press the red TRIP button.

5.3 Verification.

[1] At MCC-1 (compartment 9FA), verify that the MCC-1B main breaker status indicator shows OPEN.

NOTE
MCC-1B is now de-energized.

[2] Notify the control room operator that MCC-1B is now de-energized.

6. ISOLATION PROCEDURE OF MCC-1B.

Isolation of MCC-1B and TX-2 will prevent normal startup operation of MCC-1B and TX-2. The following steps shall be executed only after MCC-1B shutdown operation (paragraph 5 above) is complete.

6.1 Coordination of Operations.

[1] Obtain an electrical switching order (ESO) from the supervisor.

[2] Notify the control room operator that MCC-1B and TX-2 are being isolated.

6.2 Switching Operations.

[1] At MCC-B (compartment 1FA), using the panel-mounted ammeter, verify that there is no load on the TX-2 feeder contactor.

WARNING

An electrical fault and flash could cause injury or death to personnel. Use of insulating gloves, protective body gowns, hooded face shields, and insulating floor mats are required during 5KV switching operations.

[2] Trip the TX-2 feeder contactor by pushing the green TRIP button.

NOTE

If the TRIP button does not open the TX-2 feeder contactor, manually open the contactor by pulling the manual trip knob.

[3] Verify that the green OPEN and amber LOSS OF PHASE indicating lights are on and the red CLOSE indicating light is off.

WARNING

An electrical fault and flash could cause injury or death to personnel. Use of insulating gloves, protective body gowns, hooded face shields, and insulating floor mats are required when racking out 5KV contactors.

[4] Rack out the TX-2 feeder contactor as follows:

[a] While standing on an insulating floor mat and to the hinged side of the compartment, depress the disconnect switch release mechanism and rotate the disconnect switch handle to the OFF position.

[b] Verify that the red CLOSE, green OPEN, and amber LOSS OF PHASE indicating lights are off.

NOTE

Control power from LP-1 (MCC-1A compartment 6FC) is still present for the space heater and blue indicating light.

[5] At MCC-1 (compartment 9FA), using the panel-mounted voltmeter, verify that phase-to-phase voltages are zero.

NOTE
MCC-1B and TX-2 are now isolated.

[6] Notify the control room operator that MCC-1B and TX-2 are now isolated.

6.3 Securing the Equipment.

WARNING

Failure to lock out the TX-2 feeder contactor and the MCC-1B main breaker will create a potential hazard for personnel performing maintenance on MCC-1B and TX-2.

[1] At MCC-B (compartment 1FA), attach a lock and tag to the disconnect switch release mechanism of the OFF disconnect switch.

[2] At MCC-1 (compartment 9FA), remove the kirk key from the interlock of the MCC-1B main breaker.

[3] Depress the red TRIP button and attach a lock and tag to the OPEN MCC-1B main breaker.

[4] At compartment 8FA, remove the kirk key, if applicable, from the interlock of the MCC-1A/1B bus-tie breaker.

[5] Depress the red TRIP button and attach a lock and tag to the OPEN MCC-1A/1B bus-tie breaker.

[6] Log all locks and tags installed as part of the isolation procedure.

NOTE 1
MCC-1B and TX-2 are now secured for maintenance.

NOTE 2
The number of each lock and tag as well as the name of the person who installed them shall be entered in the lockout/tagout log.

NOTE 3
A clearance order (Safe Work Permit) shall be obtained from the operations shift supervisor prior to start of work.

[7] Notify the control room operator that MCC-1B and TX-2 are now secured for maintenance.

7. AUTOMATIC SHUTDOWN OF MCC-1B.

An automatic shutdown of MCC-1B occurs when protective devices detect an abnormal condition and trip open the TX-2 feeder contactor or the MCC-1B main breaker.

When MCC-1B loses normal power, emergency generator SJEG-10 will automatically start and automatic transfer switch SJATS-1 will transfer emergency power to MCC-1B. If the condition that caused the automatic shutdown of MCC-1B is detected at SJEG-10, the output breaker for SJEG-10 will trip and shut down emergency power to MCC-1B. In the event of an automatic shutdown, the following steps shall be executed to assist maintenance personnel in determining the cause of the shutdown.

7.1 Shutdown Investigation.

[1] Notify the control room operator that MCC-1B has automatically shutdown and is being investigated.

WARNING

Due to the unknown nature or exact location of the condition which caused the automatic shutdown, all nonessential personnel shall stay clear of power distribution equipment associated with MCC-1B and TX-2.

[2] Clear the area around MCC-1B and TX-2 of all nonessential personnel until isolation procedure is complete.

[3] Inspect the exterior of MCC-1B, TX-2, and MCC-B (compartment 1FA) for any signs of damage or conditions which may affect the system operation.

[4] At MCC-1B, record the status of the following items:

[a] Main breaker - open or closed.

[b] Phase-to-phase voltages on the panel-mounted voltmeter.

[c] All branch circuit breakers that have tripped.

[d] Ammeter readings for all phases.

[5] At MCC-1 (compartment 8FA), record the status of the MCC-1A/1B bus-tie breaker - open or closed.

[6] At MCC-B (compartment 1FA), record the status of the following items:

[a] Red, green, amber, and blue indicating lights - on or off.

[b] Ammeter readings for all phases.

[c] Loss of phase relay 46 - tripped or reset.

[7] At SJATS-1, record the status of the following items:

[a] All indicating lights - on or off.

[b] Phase-to-phase voltages on the panel-mounted voltmeter.

[c] Ammeter readings for all phases.

[d] Hertz reading on the frequency meter.

[8] At SJEG-10, record the status of SJEG-10 - off or running.

[9] Record the status of the SJEG-10 output breaker - open, tripped, or closed.

[10] At SJAPEG-10, record all generator status indicating lights that are on.

7.2 Switching and Isolation Operations.

[1] If the MCC-1B main breaker and TX-2 feeder contactor have both tripped open, then isolate per paragraph 6 above.

[2] If only the MCC-1B main breaker has tripped open, then isolate as follows:

[a] At MCC-1 (compartment 9FA), remove the kirk key from the interlock of the MCC-1B main breaker.

[b] Depress the red TRIP button and attach a lock and tag to the MCC-1B main breaker.

[c] Enter the lock and tag into the lockout/tagout log.

[3] If the MCC-1B main breaker is still closed, but the TX-2 feeder contactor at MCC-B has tripped open, then isolate per paragraph 6 above.

[4] If the SJEG-10 output breaker has tripped open, then follow the isolation procedure per work package 016 00.

[5] Report all findings and actions taken to the supervisor.

8. RECORDS.

A. Any locks or tags attached to or removed from MCC-1B or MCC-B shall be entered in the lockout/tagout log.

B. Any findings of abnormal conditions shall be noted and reported to the control room operator, the supervisor, and the maintenance manager. A work request shall be initiated to correct the problem.

APPENDIX A

ONE-LINE DIAGRAMS
(Sheet 1 of 3)

MCC-1B

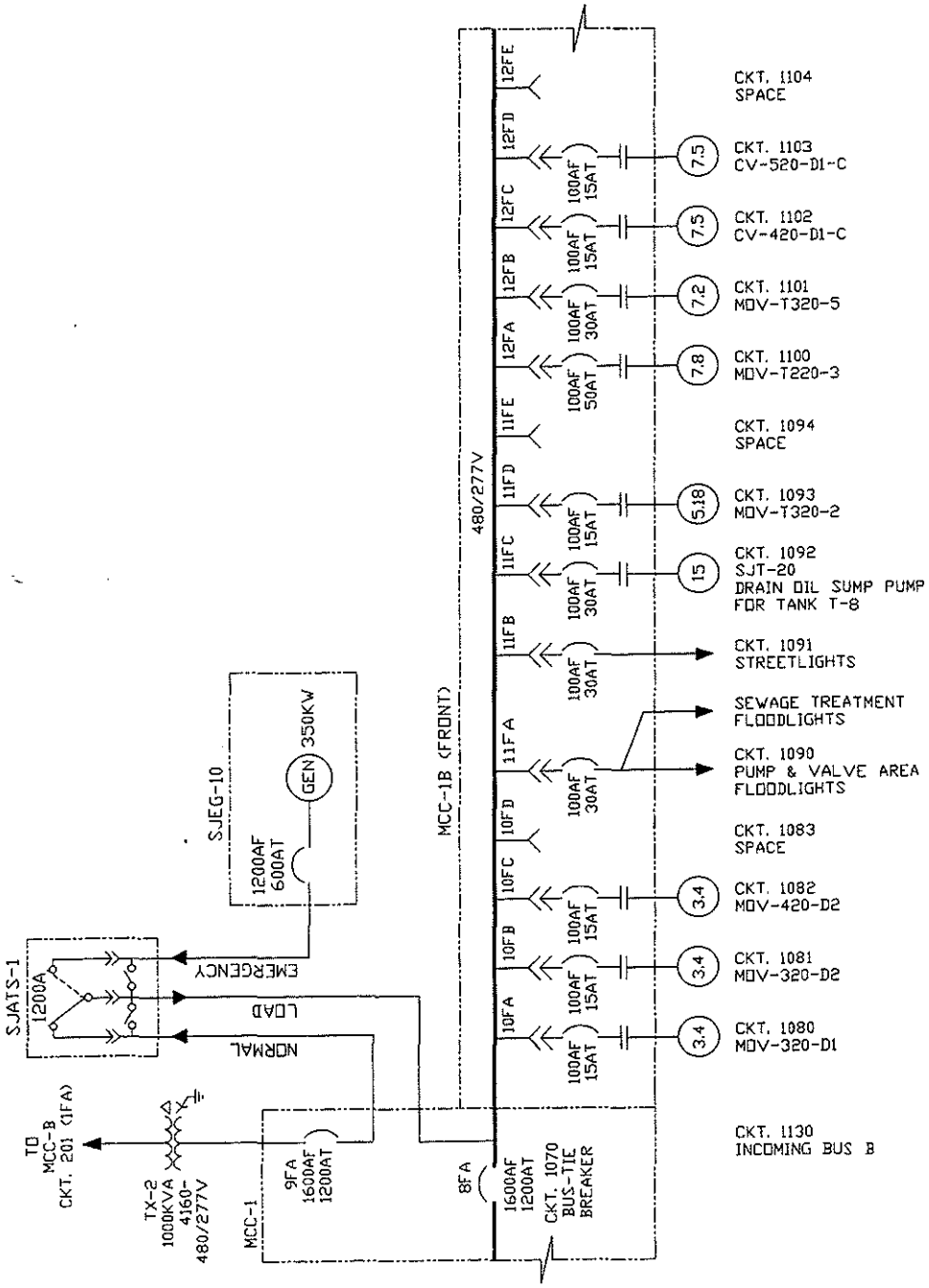

APPENDIX A

ONE-LINE DIAGRAMS
(Sheet 2)

MCC-1B

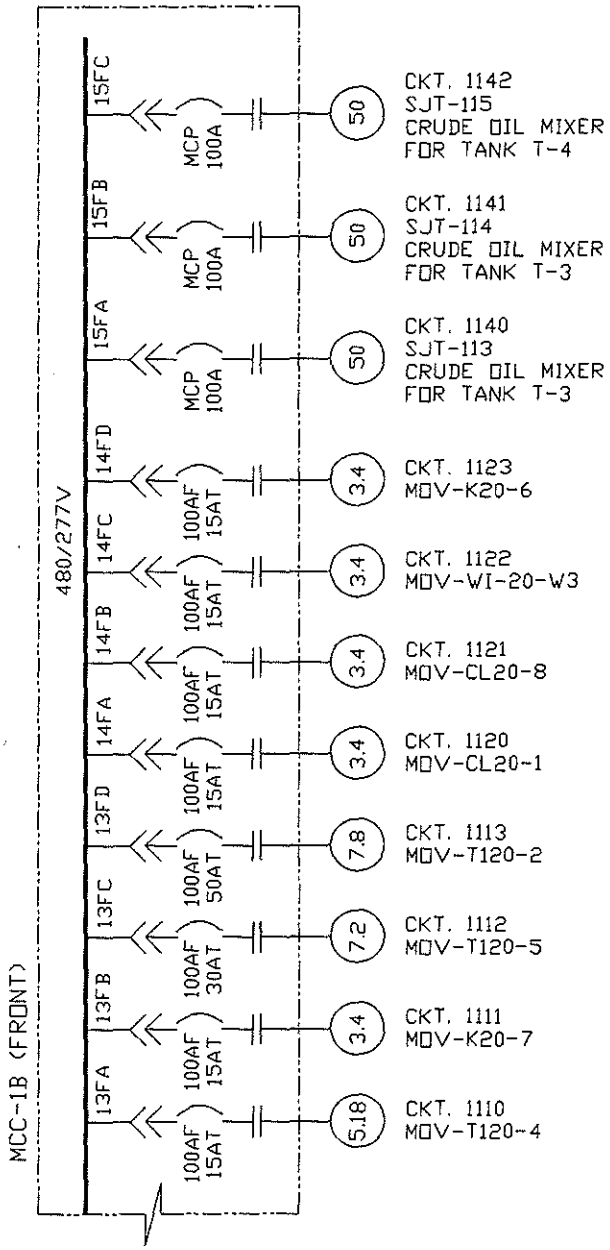

APPENDIX A

ONE-LINE DIAGRAMS
(Sheet 3)

MCC-1B

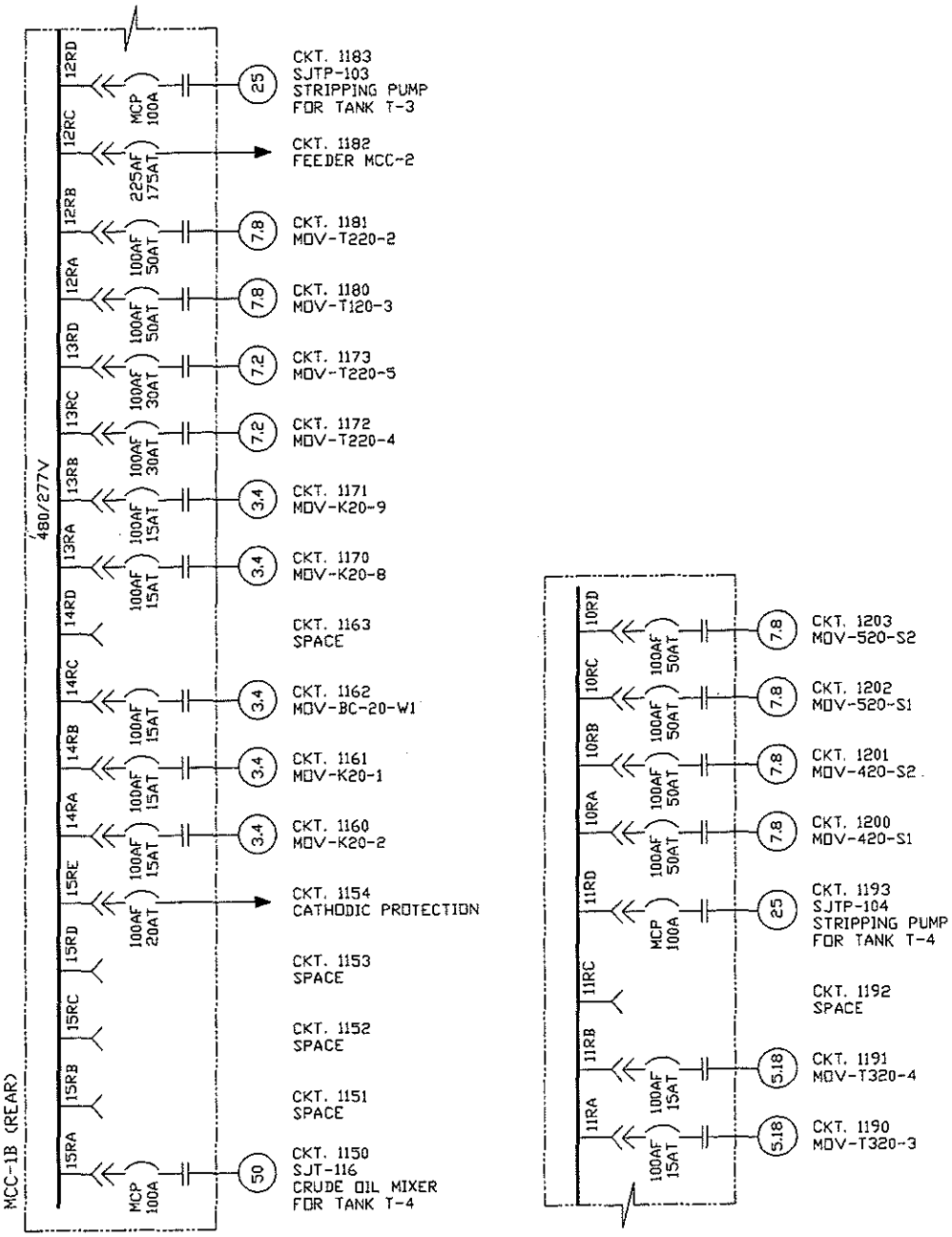

APPENDIX B

ELEVATIONS (Sheet 1 of 2)

MCC-1B

10F	11F	12F	13F	14F	15F
CKT. 1080 MOV-320-D1 10FA	CKT. 1090 FLOODLIGHTS 11FA	CKT. 1100 MOV-T220-3 12FA	CKT. 1110 MOV-T120-4 13FA	CKT. 1120 MOV-CL20-1 14FA	CKT. 1140 SJT-113 CRUDE OIL MIXER FOR TANK T-3 15FA
CKT. 1081 MOV-320-D2 10FB	CKT. 1091 STREETLIGHTS 11FB	CKT. 1101 MOV-T320-5 12FB	CKT. 1111 MOV-K20-7 13FB	CKT. 1121 MOV-CL20-8 14FB	CKT. 1141 SJT-114 CRUDE OIL MIXER FOR TANK T-3 15FB
CKT. 1082 MOV-420-D2 10FC	CKT. 1092 SJT-20 DRAIN OIL SUMP PUMP FOR T-8 11FC	CKT. 1102 CV-420-D1-C 12FC	CKT. 1112 MOV-T120-5 13FC	CKT. 1122 MOV-WI-20-W3 14FC	CKT. 1142 SJT-115 CRUDE OIL MIXER FOR TANK T-4 15FC
CKT. 1083 SPACE 10FD	CKT. 1093 MOV-T320-2 11FD	CKT. 1103 CV-520-D1-C 12FD	CKT. 1113 MOV-T120-2 13FD	CKT. 1123 MOV-K20-6 14FD	
	CKT. 1094 SPACE 11FE	CKT. 1104 SPACE 12FE			

APPENDIX B
ELEVATIONS (Sheet 2)
MCC-1B

15R	14R	13R	12R	11R	10R
CKT. 1150 SJT-116 CRUDE OIL MIXER FOR TANK T-4 15RA	CKT. 1160 MOV-K20-2 14RA	CKT. 1170 MOV-K20-8 13RA	CKT. 1180 MOV-T120-3 12RA	CKT. 1190 MOV-T320-3 11RA	CKT. 1200 MOV-420-S1 10RA
CKT. 1151 SPACE 15RB	CKT. 1161 MOV-K20-1 14RB	CKT. 1171 MOV-K20-9 13RB	CKT. 1181 MOV-T220-2 12RB	CKT. 1191 MOV-T320-4 11RB	CKT. 1201 MOV-420-S2 10RB
CKT. 1152 SPACE 15RC	CKT. 1162 MOV-BC-20-W1 14RC	CKT. 1172 MOV-T220-4 13RC	CKT. 1182 FEEDER MCC-2 12RC	CKT. 1192 SPACE 11RC	CKT. 1202 MOV-520-S1 10RC
CKT. 1153 SPACE 15RD	CKT. 1163 SPACE 14RD	CKT. 1173 MOV-T220-5 13RD	CKT. 1183 SJTP-103 STRIPPING PUMP FOR TANK T-3 12RD	CKT. 1193 SJTP-104 STRIPPING PUMP FOR TANK T-4 11RD	CKT. 1203 MOV-520-S2 10RD
15RE CKT. 1154 CATH. PROT.					

APPENDIX C

ELECTRICAL LOADS-
(Sheet 1 of 2)

The following list of electrical loads are fed from MCC-1B and will be affected by normal shutdown or automatic shutdown of MCC-1B:

MCC-1A/1B bus-tie breaker.
MOV-320-D1.
MOV-320-D2.
MOV-420-D2.
Floodlights.
Streetlights.
SJT-20 Drain oil sump pump for tank T-8.
MOV-T320-2.
MOV-T220-3.
MOV-T320-5.
Control valve 420-D1-C.
Control valve 520-D1-C.
MOV-T120-4.
MOV-K20-7.
MOV-T120-5.
MOV-T120-2.
MOV-CL20-1.
MOV-CL20-8.
MOV-WI-20-W3.
MOV-K20-6.
SJT-113 Crude oil tank mixer for tank T-3.
SJT-114 Crude oil tank mixer for tank T-3.
SJT-115 Crude oil tank mixer for tank T-4.
SJT-116 Crude oil tank mixer for tank T-4.
Cathodic protection.
MOV-K20-2.
MOV-K20-1.
MOV-BC-20-W1.
MOV-K20-8.
MOV-K20-9.
MOV-T220-4.
MOV-T220-5.
MOV-T120-3.
MOV-T220-2.
SJTP-103 Stripper pump for tank T-3.
MOV-T320-3.
MOV-T320-4.
SJTP-104 Stripper pump for tank T-4.
MOV-420-S1.
MOV-420-S2.
MOV-520-S1.
MOV-520-S2.

APPENDIX C

ELECTRICAL LOADS-
(Sheet 2)

Motor Control Center 2 (MCC-2):
- EPP-1 Power panel.
- 5KVA transformer at emergency generator SJEG-10.
- Control building emergency power.
- Maintenance building emergency power.
- Uninterruptible power supply.
- MOV-T320-1.
- MOV-T420-1.
- **Motor Control Center 3E (MCC-3E):**
  - MOV-BC-20-E.
  - MOV-WI-20-B.
  - Radio antenna tower.
  - SJT-22 Slop oil sump pump for tank T-10.
- **Motor Control Center 4E (MCC-4E):**
  - MOV-T120-1.
  - MOV-T220-1.
  - SJT-19 Drain oil sump pump for tank T-7.
- **Motor Control Center 5E (MCC-5E):**
  - Sewage treatment plant no. 2.
  - Lift station no. 2.
  - Permanent facility.
  - LP-5 Lighting panel via 15KVA transformer LT-5.
  - MOV-T520-1.
  - MOV-T620-1.
  - Security Operations Center (SOC).
  - Guardhouse.
  - Streetlights.
  - Cantilever barrier no. 1.
  - Cantilever barrier no. 2.

NORMAL OPERATING PROCEDURE

SAINT JAMES SITE

480V MCC-1A/MCC-1B BUS-TIE BREAKER

NORMAL OPERATING PROCEDURE

SAINT JAMES SITE

480V MCC-1A/MCC-1B BUS-TIE BREAKER

List of Effective Work Package Pages

Page No.	Chg. No.	Page No.	Chg. No.	Page No.	Chg. No.
1 thru 12	0				

Record of Applicable Technical Directives

None

TABLE OF CONTENTS

Para.	Title	Page
1.	INTRODUCTION	3
1.1	Purpose	3
1.2	Scope	3
1.3	Applicability	3
1.4	Reference Documents	4
2.	PRECAUTIONS AND LIMITATIONS	4
3.	PREREQUISITE ACTIONS	4
4.	CLOSING THE BUS-TIE FOR MCC-1B FEEDING MCC-1A	5
4.1	Bus-tie Preparation	5
4.2	Switching Operations	6
4.3	Monitoring	6
5.	CLOSING THE BUS-TIE FOR MCC-1A FEEDING MCC-1B	6
5.1	Bus-tie Preparations	7
5.2	Switching Operations	7
5.3	Monitoring	8
6.	OPENING THE BUS-TIE	8
6.1	Bus-tie Preparations	8
6.2	Switching Operations	8
6.3	Verification	9
7.	ISOLATION PROCEDURE OF THE BUS-TIE	9
8.	AUTOMATIC SHUTDOWN OF THE BUS-TIE	9
8.1	Shutdown Investigation	10
8.2	Switching and Isolation Operations	10
9.	RECORDS	10
Appendix A	MCC-1A and MCC-1B One-Line Diagram	11
Appendix B	MCC-1A/1B Bus-tie Breaker Front Elevation	12

1. INTRODUCTION.

Motor Control Center No. 1 (MCC-1) is located in the motor control center room of building 704 and is comprised of the main breakers for MCC-1A and MCC-1B, and the MCC-1A/1B bus-tie breaker. The MCC-1A/1B bus-tie breaker can tie the MCC-1A and MCC-1B buses together in the event that MCC-1A or MCC-1B loses its normal power source. A kirk key interlock system allows only one main breaker to be closed while the bus-tie breaker is closed. The MCC-1A/1B bus-tie breaker is a 480-volt, 1600-ampere frame breaker with a 1200-ampere trip. See Appendixes A and B.

MCC-1A has a 1600-ampere rated bus and a 1600-ampere frame main breaker with a 1200-ampere trip. MCC-1A is fed from 5KV MCC-A via step-down transformer TX-1. MCC-1A can be fed from MCC-1B through the MCC-1A/1B bus-tie breaker. Operating instructions for MCC-1A are given in work package 008 00.

MCC-1B has a 1600-ampere rated bus and a 1600-ampere frame main breaker with a 1200-ampere trip. MCC-1B is fed from 5KV MCC-B via step-down transformer TX-2. MCC-1B can be fed from MCC-1A through the MCC-1A/1B bus-tie breaker. If MCC-1B loses normal power, emergency power is available from emergency generator SJEG-10 through automatic switch SJATS-1. Operating instructions for MCC-1B are given in work package 017 00.

1.1 Purpose. This procedure provides step-by-step operations which shall be performed to safely and efficiently operate the MCC-1A/1B bus-tie breaker.

1.2 Scope. This procedure provides directions to an authorized electrician for the performance of the following activities under normal conditions:

A. Close the MCC-1A/1B bus-tie breaker.

B. Open the MCC-1A/1B bus-tie breaker.

C. Isolate the MCC-1A/1B bus-tie breaker.

D. Investigate an automatic shutdown of the MCC-1A/1B bus-tie breaker.

1.3 Applicability. The activities described in this procedure shall be performed by an authorized electrician at the request of the supervisor.

1.4 Reference Documents.

A. Block Diagram Power Distribution, drawing SJ-E-302-018.

B. One-Line Diagram 480V MCC-1A, drawing SJ-E-302-057.

C. One-Line Diagram 480V MCC-1B, drawing SJ-E-302-058.

D. Work package 008 00, 480V Motor Control Center MCC-1A.

E. Work package 016 00, Emergency Generator Set SJEG-10.

F. Work package 017 00, 480V Motor Control Center MCC-1B.

2. PRECAUTIONS AND LIMITATIONS.

The following precautions and limitations apply to the operation of the MCC-1A/1B bus-tie breaker:

A. All nonessential personnel shall maintain a minimum distance of 10 feet from the MCC-1A/1B bus-tie breaker during switching operations.

B. The possible power source for the MCC-1A/1B bus-tie breaker is MCC-1A or MCC-1B. The nominal phase-to-phase bus voltage from each source is 480 volts (460V to 510V acceptable).

C. A kirk key interlock system allows only one main breaker (MCC-1A or MCC-1B) to be closed while the bus-tie breaker is closed.

3. PREREQUISITE ACTIONS.

The following prerequisite actions shall be accomplished prior to the operation of the MCC-1A/1B bus-tie breaker:

A. Review the job safety analysis (JSA), if applicable, on this equipment for potential safety hazards and review associated one-line diagrams with the supervisor.

B. The supervisor shall verify that routine preventive maintenance has been performed on MCC-1A, MCC-1B, and the MCC-1A/1B bus-tie breaker as described in the applicable maintenance requirement card (MRC).

C. The operations shift supervisor shall ensure all clearance orders (Safe Work Permits) associated with the MCC-1A/1B bus-tie breaker have been issued.

D. Visually inspect MCC-1A, MCC-1B, and the MCC-1A/1B bus-tie breaker for any evidence of moisture, rodents, or other signs of damage. Report same to supervisor.

E. Visually check for any temporary wiring, grounds, locks, or tags. All findings shall be reported to the control room operator and the supervisor.

F. Site operations personnel shall verify equipment status and install or remove locks and tags as necessary.

G. Visually inspect the kirk key interlock system to verify that it is fully operational.

H. Verify that either MCC-1A or MCC-1B is de-energized, and that the other is energized. If the motor control center that should be de-energized is not already de-energized, then it shall be de-energized per the applicable work package, 008 00 or 017 00. Similarly, if the motor control center that should be energized is not energized, then it shall be energized per the applicable work package, 008 00 or 017 00.

4. CLOSING THE BUS-TIE FOR MCC-1B FEEDING MCC-1A.

The closing of the MCC-1A/1B bus-tie breaker where MCC-1B is energized and is used to feed de-energized MCC-1A is accomplished when the following steps are performed.

4.1 Bus-tie Preparation.

[1] Obtain an electrical switching order (ESO) from the supervisor.

[2] Clear the area around MCC-1A, MCC-1B, and the MCC-1A/1B bus-tie breaker of all nonessential personnel until switching operations are complete.

[3] At MCC-1 (compartment 8FA) verify that the MCC-1A/1B bus-tie breaker status indicator shows OPEN.

[4] At compartment 7FA, verify that the MCC-1A main breaker status indicator shows OPEN.

[5] At MCC-1A, verify that all branch circuit breakers are in the OFF position.

[6] At MCC-1 (compartment 9FA), using the panel-mounted voltmeter, verify that phase-to-phase bus voltages are nominally 480 volts. Report any readings less than 460 volts to the supervisor.

4.2 Switching Operations.

[1] Notify the control room operator that the MCC-1A/1B bus-tie breaker is being closed.

[2] At MCC-1, close the bus-tie breaker per the following steps:

[a] At compartment 7FA, turn the kirk key to the open (key released) position and remove the kirk key from the MCC-1A main breaker.

[b] At compartment 8FA, insert the kirk key into the bus-tie breaker lock and turn the kirk key to the closed (key seized) position.

[c] Rotate the breaker charging handle counterclockwise 180 degrees and return to its center position. The charge status indicator will show CHARGED.

[d] Press the black CLOSE button.

4.3 Monitoring.

[1] At MCC-1 (compartment 8FA), verify that the MCC-1A/1B bus-tie breaker status indicator shows CLOSED and the charge status indicator shows DISCHARGED.

[2] At compartment 9FA, using the panel-mounted voltmeter, verify that phase-to-phase bus voltages are nominally 480 volts (460V to 510V acceptable).

NOTE

MCC-1A is now energized and available for startup of other 480V equipment.

[3] Notify the control room operator that the MCC-1A/1B bus-tie breaker is now closed and that MCC-1A is being fed from MCC-1B.

5. CLOSING THE BUS-TIE FOR MCC-1A FEEDING MCC-1B.

In order to feed MCC-1B from MCC-1A through the bus-tie breaker, emergency generator SJEG-10 and automatic transfer switch SJATS-1 must be isolated. This is to

prevent the generator from starting when MCC-1B loses power.

The closing of the MCC-1A/1B bus-tie breaker where MCC-1A is energized and is used to feed de-energized MCC-1B is accomplished when the following steps are performed.

5.1 Bus-tie Preparations.

[1] Obtain an electrical switching order (ESO) from the supervisor.

[2] Clear the area around MCC-1A, MCC-1B, and the MCC-1A/1B bus-tie breaker of all nonessential personnel until switching operations are complete.

[3] At MCC-1 (compartment 8FA), verify that the MCC-1A/1B bus-tie breaker status indicator shows OPEN.

[4] At MCC-1B, verify that all branch circuit breakers are in the OFF position.

[5] At MCC-1 (compartment 7FA), using the panel-mounted voltmeter, verify that phase-to-phase bus voltages are nominally 480 volts. Report any readings less than 460 volts to the supervisor.

5.2 Switching Operations.

[1] Notify the control room operator that the MCC-1A/1B bus-tie breaker is being closed and that emergency generator SJEG-10 and automatic transfer switch SJATS-1 are being isolated.

[2] Isolate SJEG-10 and SJATS-1 per work package 016 00.

[3] At MCC-1 (compartment 9FA), press the red TRIP button.

[4] Verify that the MCC-1B main breaker status indicator shows OPEN.

[5] At MCC-1, close the bus-tie breaker per the following steps:

[a] At compartment 9FA, turn the kirk key to the open (key released) position and remove the kirk key from the MCC-1B main breaker.

[b] At compartment 8FA, insert the kirk key into the bus-tie breaker lock and turn the kirk key to the closed (key seized) position.

[c] Rotate the breaker charging handle counterclockwise 180 degrees and return to its center position. The charge status indicator will show CHARGED.

[d] Press the black CLOSE button.

5.3 Monitoring.

[1] At MCC-1 (compartment 8FA) verify that the MCC-1A/1B bus-tie breaker status indicator shows CLOSED and the charge status indicator shows DISCHARGED.

[2] At compartment 7FA, using the panel-mounted voltmeter, verify that phase-to-phase bus voltages are nominally 480 volts (460V to 510V acceptable).

NOTE

MCC-1B is now energized and available for startup of other 480V equipment.

[3] Notify the control room operator that the MCC-1A/1B bus-tie breaker is now closed and that MCC-1B is being fed from MCC-1A.

6. OPENING THE BUS-TIE.

Normal operation is when the MCC-1A/1B bus-tie breaker is in the OPEN position. The following steps shall be performed to open the MCC-1A/1B bus-tie breaker.

6.1 Bus-tie Preparations.

[1] Obtain an electrical switching order (ESO) from the supervisor.

[2] Verify that all loads on the motor control center being fed through the bus-tie breaker are de-energized. Any loads associated with this motor control center which are not de-energized will be lost when the bus-tie breaker is opened.

6.2 Switching Operations.

[1] Notify the control room operator that the MCC-1A/1B bus-tie breaker is being opened.

[2] At MCC-1, open the bus-tie breaker per the following steps:

[a] At compartment 8FA, press the red TRIP button.

[b] Turn the kirk key to the open (key released) position. Remove the kirk key and insert it into

the de-energized motor control center main breaker kirk key lock.

[3] If applicable, restore power to the de-energized motor control center and bring the emergency generator back on-line per work packages 008 00 or 017 00, and 016 00, respectively.

6.3 Verification.

[1] At MCC-1 (compartment 8FA), verify that the MCC-1A/1B bus-tie breaker status indicator shows OPEN.

[2] At compartments 7FA, 8FA, and 9FA, verify that the kirk keys are:

[a] Removed from the bus-tie breaker.

[b] In the closed (key seized) position for the energized motor control center(s).

[3] Notify the control room operator that the MCC-1A/1B bus-tie breaker is now open.

7. ISOLATION PROCEDURE OF THE BUS-TIE.

Isolation of the 480V bus-tie breaker and its compartment for maintenance shall be accomplished by de-energizing both MCC-1A and MCC-1B. To isolate MCC-1A and MCC-1B, follow the isolation procedures described in work packages 008 00 and 017 00, respectively.

NOTE

To inspect the bus-tie breaker and its compartment, it is not necessary to isolate the compartment by de-energizing MCC-1A and MCC-1B.

8. AUTOMATIC SHUTDOWN OF THE BUS-TIE.

An automatic shutdown of the MCC-1A/1B bus-tie breaker occurs when the bus-tie breaker detects an abnormal condition and trips open. In the event of an automatic shutdown, the following steps shall be executed to assist maintenance personnel in determining the cause of the shutdown.

8.1 Shutdown Investigation.

WARNING

Due to the unknown nature or exact location of the condition which caused the automatic shutdown, all nonessential personnel shall stay clear of power distribution equipment associated with the bus-tie breaker.

[1] Determine which motor control center was being fed by the bus-tie breaker.

[2] Follow the shutdown investigation procedure for the applicable motor control center described in work package 008 00 or 017 00.

8.2 Switching and Isolation Operations. Follow the switching and isolation operations for the applicable motor control center described in work package 008 00 or 017 00.

9. RECORDS.

A. Any locks or tags attached to or removed from MCC-1A, MCC-1B, or the MCC-1A/1B bus-tie breaker shall be entered in lockout/tagout log.

B. Any findings of abnormal conditions shall be noted and reported to the control room operator, the supervisor, and the maintenance manager. A work request shall be initiated to correct the problem.

APPENDIX A

MCC-1A AND MCC-1B ONE-LINE DIAGRAM

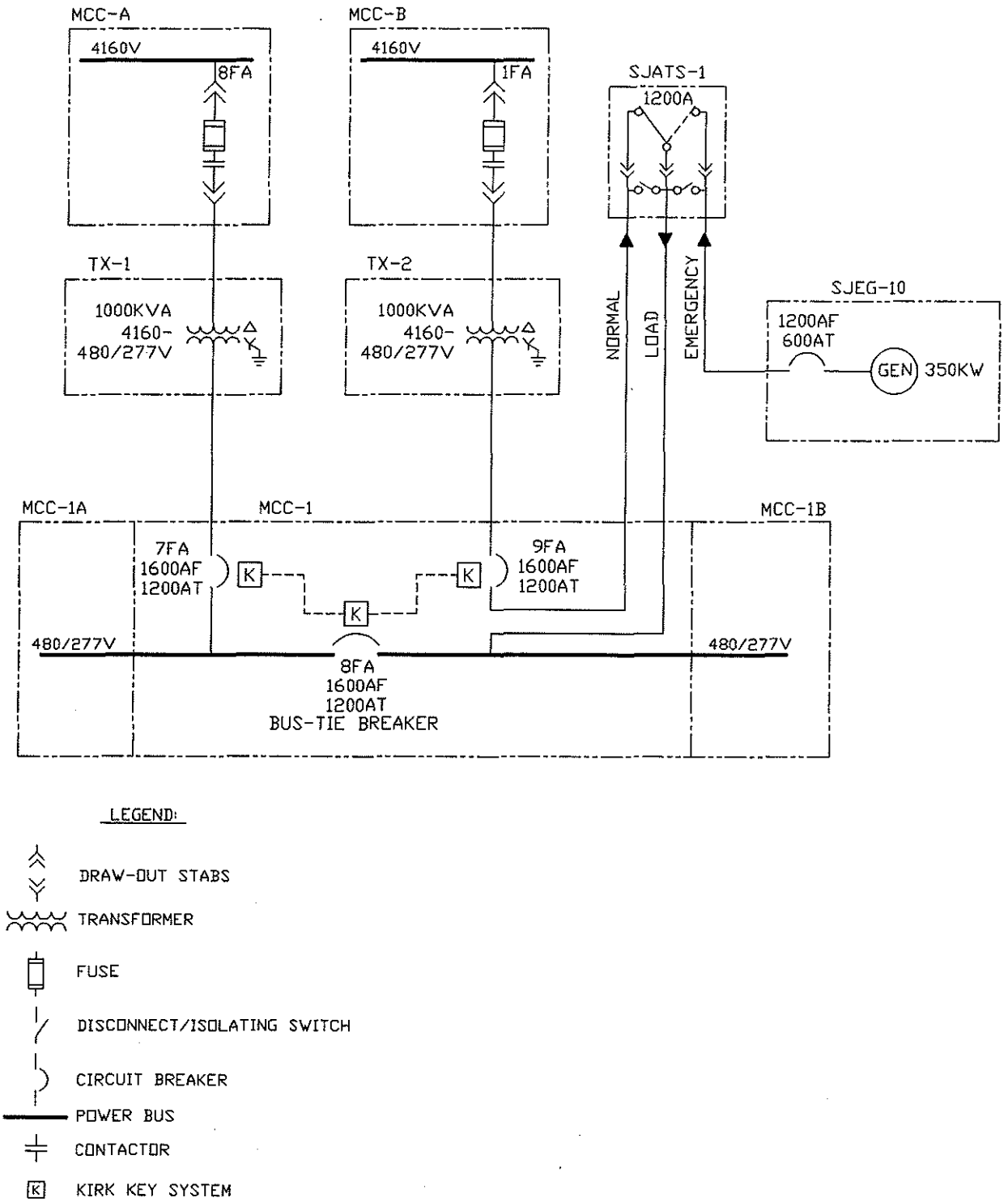

APPENDIX B

MCC-1A/1B BUS-TIE BREAKER FRONT ELEVATION

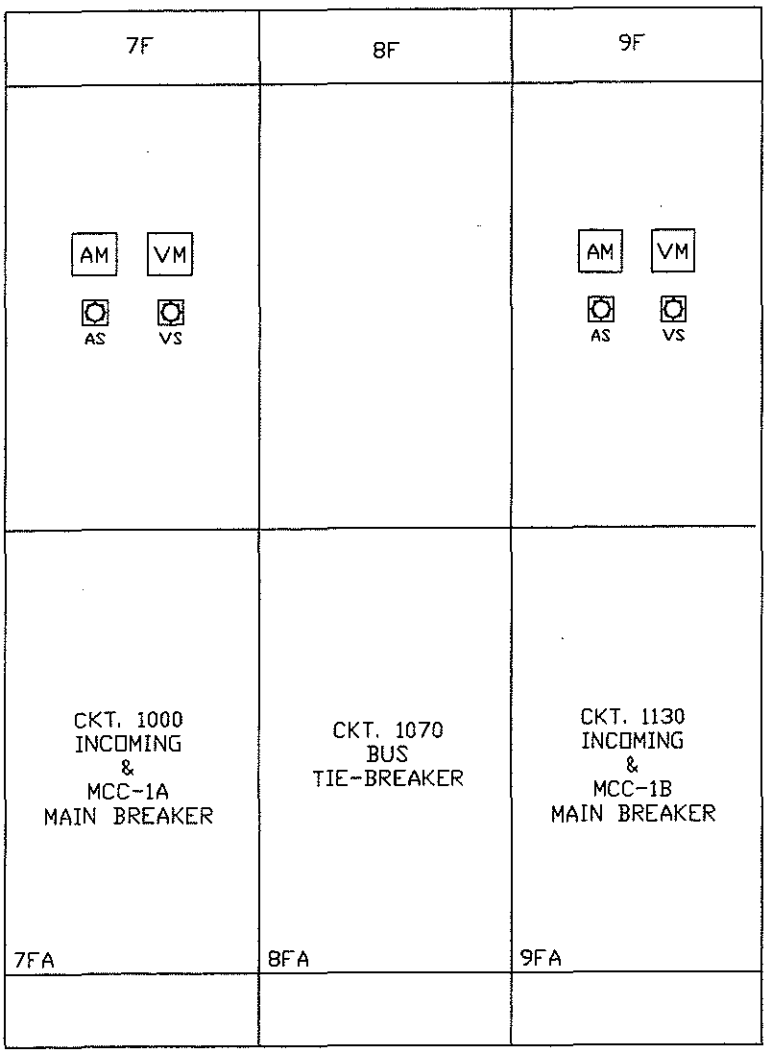

NORMAL OPERATING PROCEDURE

SAINT JAMES SITE

480V MOTOR CONTROL CENTER MCC-2

NORMAL OPERATING PROCEDURE

SAINT JAMES SITE

480V MOTOR CONTROL CENTER MCC-2

List of Effective Work Package Pages

Page Number	Revision Number	Page Number	Revision Number
1 thru 11/(12 Blank)	2		

Record of Applicable Technical Directives

None

TABLE OF CONTENTS

Para.	Title	Page
1.	INTRODUCTION	3
1.1	Purpose	3
1.2	Scope	3
1.3	Applicability	3
1.4	Reference Documents	3
2.	PRECAUTIONS AND LIMITATIONS	3
3.	PREREQUISITE ACTIONS	4
4.	NORMAL STARTUP OPERATION OF MCC-2	4
4.1	Startup Preparations	4
4.2	Switching Operations	5
4.3	Monitoring	5
5.	NORMAL SHUTDOWN OPERATION OF MCC-2	5
5.1	Shutdown Preparations	5
5.2	Switching Operations	6
5.3	Verification	6
6.	ISOLATION PROCEDURE OF MCC-2	6
6.1	Coordination of Operations	6
6.2	Securing the Equipment	6
7.	AUTOMATIC SHUTDOWN OF MCC-2	7
7.1	Shutdown Investigation	7
7.2	Switching and Isolation Operations	7
8.	RECORDS	8
Appendix A	One-Line Diagram	9
Appendix B	Elevation	10
Appendix C	Electrical Loads	11

1. INTRODUCTION.

Motor Control Center No. 2 (MCC-2) is located in the motor control center room of building 704. MCC-2 is a 480/277-volt, three-phase, four-wire system with a 600-ampere bus, and is fed from 480V MCC-1B through a 225-ampere frame breaker with a 175-ampere trip. MCC-1B receives normal power from 5KV MCC-B and emergency power from emergency generator SJEG-10. MCC-2 is used to distribute 480-volt, three-phase power to motor control centers MCC-3E, MCC-4E, and MCC-5E, the UPS system, and other miscellaneous 480-volt loads. See Appendixes A, B, and C.

1.1 **Purpose.** This procedure provides step-by-step operations which shall be performed to safely and efficiently operate MCC-2.

1.2 **Scope.** This procedure provides directions to an authorized electrician for the performance of the following activities under normal conditions:

A. Start up MCC-2.

B. Shut down MCC-2.

C. Isolate MCC-2.

D. Investigate an automatic shutdown of MCC-2.

1.3 **Applicability.** The activities described in this procedure shall be performed by an authorized electrician at the request of the supervisor.

1.4 **Reference Documents.**

A. Block Diagram Power Distribution, drawing SJ-E-302-018.

B. One-Line Diagram 480V MCC-1B, drawing SJ-E-302-058.

C. One-Line Diagram 480V MCC-2, MCC-3 & 3E, drawing SJ-E-302-059.

D. Work package 017 00, 480V Motor Control Center MCC-1B.

E. Work package 020 00, 480V Motor Control Center MCC-3E.

F. Work package 021 00, 480V Motor Control Center MCC-4E.

G. Work package 022 00, 480V Motor Control Center MCC-5E.

2. PRECAUTIONS AND LIMITATIONS.

The following precautions and limitations apply to the operation of MCC-2:

A. All nonessential personnel shall maintain a minimum distance of 10 feet from MCC-2 when power is first applied, until startup is complete.

B. The power source for MCC-2 is MCC-1B. The nominal phase-to-phase voltage from this source is 480 volts (460V to 510V acceptable).

3. PREREQUISITE ACTIONS.

The following prerequisite actions shall be accomplished prior to the operation of MCC-2:

A. Review the job safety analysis (JSA), if applicable, on this equipment for potential safety hazards and review associated one-line diagrams with the supervisor.

B. The supervisor shall verify that routine preventive maintenance has been performed on MCC-2 and its components as described in the applicable maintenance requirement card (MRC).

C. The operations shift supervisor shall ensure all clearance orders (Safe Work Permits) associated with MCC-2 have been issued.

D. Visually inspect MCC-2 and MCC-1B for any evidence of moisture, rodents, or other signs of damage. Report same to supervisor.

E. Visually check for any temporary wiring, grounds, locks, or tags. All findings shall be reported to the control room operator and the supervisor.

F. Site operations personnel shall verify equipment status and install or remove locks and tags as necessary.

4. NORMAL STARTUP OPERATION OF MCC-2.

A normal startup operation is performed when 480V power is applied to MCC-2 from MCC-1B. The following steps shall be executed to complete MCC-2 startup.

4.1 Startup Preparations.

[1] Obtain an electrical switching order (ESO) from the supervisor.

[2] Clear the area around MCC-2 of all nonessential personnel until startup is complete.

[3] At MCC-2, verify that all branch circuit breakers are in the OFF position.

[4] At MCC-1 (compartment 9FA), using the panel-mounted voltmeter, verify that phase-to-phase bus voltages are nominally 480 volts.

Report any phase-to-phase readings less than 460 volts to the supervisor.

4.2 Switching Operations.

[1] Notify the control room operator that MCC-2 is being energized.

[2] At MCC-1B (compartment 12RC), turn the handle of the MCC-2 feeder breaker to the ON position.

4.3 Monitoring.

[1] At MCC-1B (compartment 12RC), verify that the MCC-2 feeder breaker is in the ON position.

[2] At MCC-1 (compartment 9FA), using the panel-mounted voltmeter, verify that phase-to-phase bus voltages are nominally 480 volts (460V to 510V acceptable).

NOTE

MCC-2 is now energized and available for startup of other 480V equipment.

[3] Notify the control room operator that MCC-2 is now energized.

5. NORMAL SHUTDOWN OPERATION OF MCC-2.

A normal shutdown operation is performed when 480V power is removed from MCC-2. The following steps shall be executed to complete MCC-2 shutdown.

5.1 Shutdown Preparations.

[1] Obtain an electrical switching order (ESO) from the supervisor.

[2] Clear the area around MCC-2 of all nonessential personnel until shutdown is complete.

[3] Shut down MCC-3E, MCC-4E, and MCC-5E per work packages 020 00, 021 00, and 022 00, respectively.

[4] At MCC-2, verify that all branch circuits are de-energized by visually checking the position of all branch circuit breakers. Notify the supervisor of any remaining energized circuits.

NOTE

Turning off the UPS-1 feeder breaker will cause UPS-1 to revert to battery power. UPS-1 will be fed from its battery bank until AC power is restored or the battery bank is depleted.

5.2 Switching Operations.

[1] Notify the control room operator that MCC-2 is being de-energized.

[2] At MCC-1B (compartment 12RC), turn the handle of the MCC-2 feeder breaker to the OFF position.

[3] At UPS-1, reset the audible alarm and verify that the UPS batteries are discharging by visually checking the BATTERY CONDITION indicator.

5.3 Verification.

[1] At MCC-1B (compartment 12RC), verify that the MCC-2 feeder breaker is in the OFF position.

NOTE
MCC-2 is now de-energized.

[2] Notify the control room operator that MCC-2 is now de-energized and that UPS-1 is on battery power.

6. ISOLATION PROCEDURE OF MCC-2.

Isolation of MCC-2 will prevent normal startup operation of MCC-2. The following steps shall be executed only after MCC-2 shutdown operation (paragraph 5 above) is complete.

6.1 Coordination of Operations.

[1] Obtain an electrical switching order (ESO) from the supervisor.

[2] Notify the control room operator that MCC-2 is being isolated.

6.2 Securing the Equipment.

WARNING

Failure to lock out the MCC-2 feeder breaker will create a potential hazard for personnel performing maintenance on MCC-2.

[1] At MCC-1B (compartment 12RC), attach a lock and tag to the handle of the OFF MCC-2 feeder breaker.

[2] Log all locks and tags installed as part of the isolation procedure.

NOTE 1
MCC-2 is now secured for maintenance.

NOTE 2
The number of each lock and tag as well as the name of the person who installed them shall be entered in the lockout/tagout log.

NOTE 3
A clearance order (Safe Work Permit) shall be obtained from the operations shift supervisor prior to start of work.

[3] Notify the control room operator that MCC-2 is now secured for maintenance.

7. AUTOMATIC SHUTDOWN OF MCC-2.

An automatic shutdown of MCC-2 occurs when protective devices detect an abnormal condition and trip open the MCC-2 feeder breaker at MCC-1B. In the event of an automatic shutdown, the following steps shall be executed to assist maintenance personnel in determining the cause of the shutdown.

7.1 Shutdown Investigation.

[1] Notify the control room operator that MCC-2 has automatically shutdown and is being investigated.

WARNING

Due to the unknown nature or exact location of the condition which caused the automatic shutdown, all nonessential personnel shall stay clear of power distribution equipment associated with MCC-2.

[2] Clear the area around MCC-2 of all nonessential personnel until isolation procedure is complete.

[3] Inspect the exterior of MCC-2 and MCC-1B for any signs of damage or conditions which may affect the system operation.

[4] At MCC-1B (compartment 12RC), record the status of the MCC-2 feeder breaker - on, trip, or off.

[5] At MCC-2, record all branch circuit breakers that have tripped.

7.2 Switching and Isolation Operations.

[1] If the MCC-2 feeder breaker at MCC-1B has tripped open, then perform isolation procedure per paragraph 6 above.

[2] Report all findings and actions taken to the supervisor.

8. **RECORDS.**

A. Any locks or tags attached to or removed from MCC-2 or MCC-1B (compartment 12RC) shall be entered in the lockout/tagout log.

B. Any findings of abnormal conditions shall be noted and reported to the control room operator, the supervisor, and the maintenance manager. A work request shall be initiated to correct the problem.

APPENDIX A

ONE-LINE DIAGRAM

MCC-2

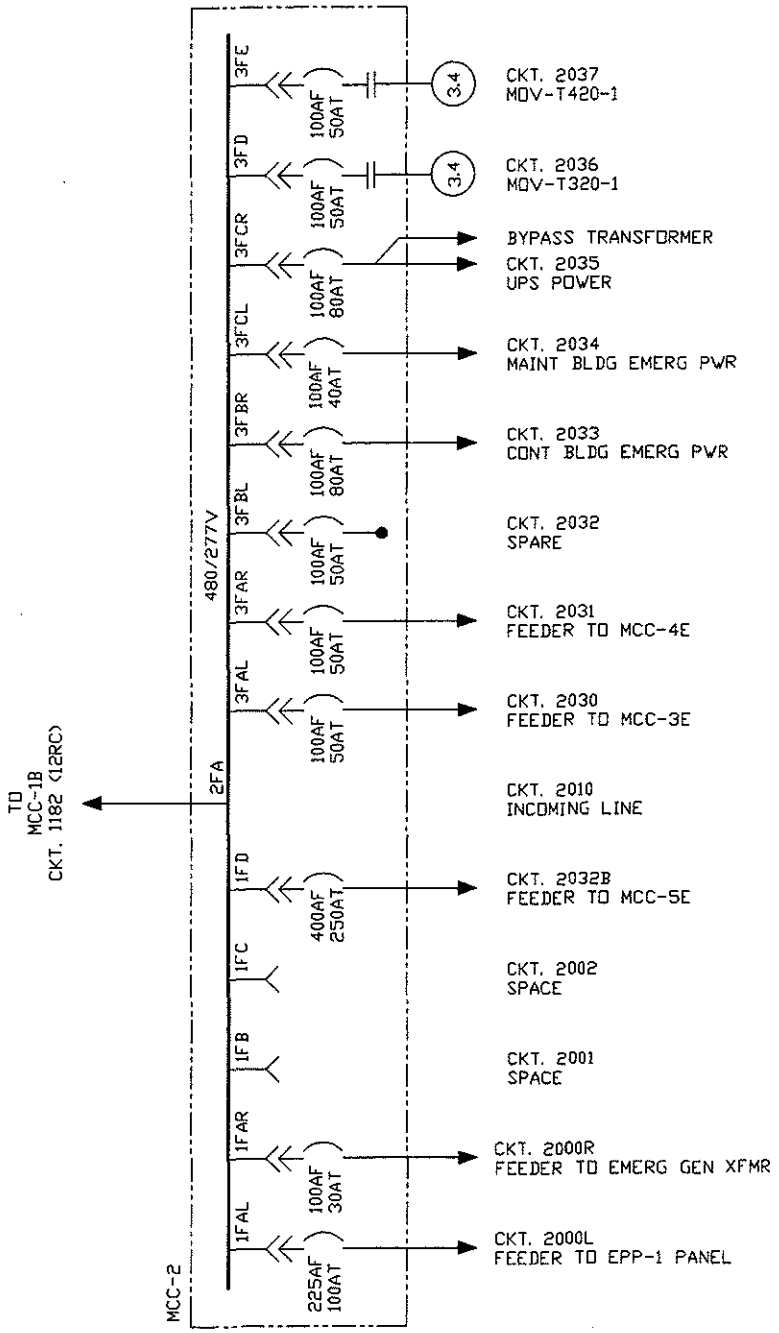

APPENDIX B

ELEVATION

MCC-2

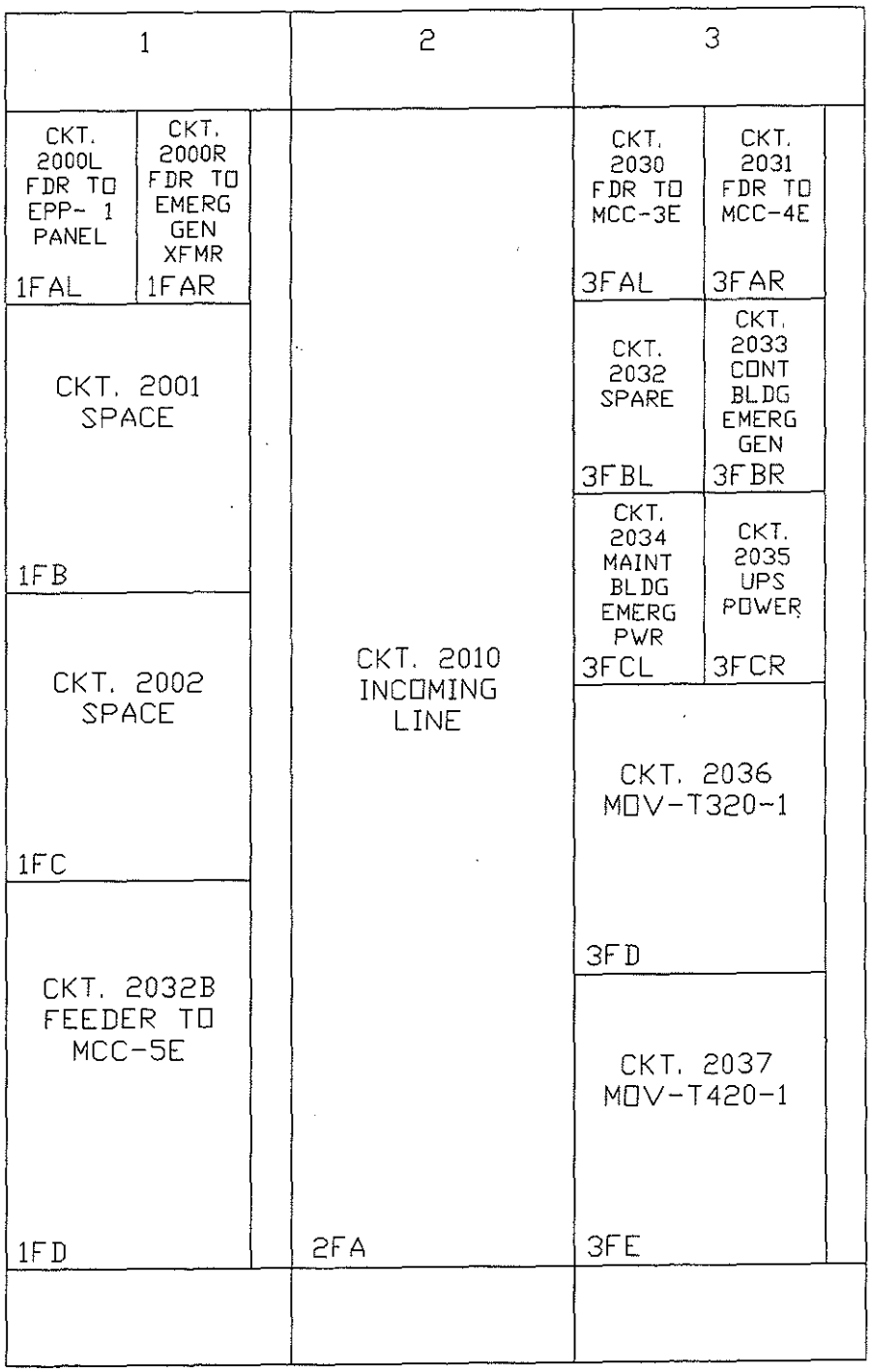

APPENDIX C

ELECTRICAL LOADS

The following list of electrical loads are fed from MCC-2 and will be affected by normal shutdown or automatic shutdown of MCC-2:

EPP-1 Power panel.
5KVA transformer at emergency generator SJEG-10.
Control building emergency power.
Maintenance building emergency power.
Uninterruptible power supply.
MOV-T320-1.
MOV-T420-1.
Motor Control Center 3E (MCC-3E):
- MOV-BC-20-E.
- MOV-WI-20-B.
- Radio antenna tower.
- SJT-22 Slop oil sump pump for tank T-10.

Motor Control Center 4E (MCC-4E):
- MOV-T120-1.
- MOV-T220-1.
- SJT-19 Drain oil sump pump for tank T-7.

Motor Control Center 5E (MCC-5E):
- Sewage treatment plant no. 2.
- Lift station no. 2.
- Permanent facility.
- LP-5 Lighting panel via 15KVA transformer LT-5.
- MOV-T520-1.
- MOV-T620-1.
- Security Operations Center (SOC).
- Guardhouse.
- Streetlights.
- Cantilever barrier no. 1.
- Cantilever barrier no. 2.

NORMAL OPERATING PROCEDURE

SAINT JAMES SITE

480V MOTOR CONTROL CENTER MCC-3E

NORMAL OPERATING PROCEDURE

SAINT JAMES SITE

480V MOTOR CONTROL CENTER MCC-3E

List of Effective Work Package Pages

Page No.	Chg. No.	Page No.	Chg. No.	Page No.	Chg. No.
1 thru 11	0	12(Blank)	0		

Record of Applicable Technical Directives

None

TABLE OF CONTENTS

Para.	Title	Page
1.	INTRODUCTION	3
1.1	Purpose	3
1.2	Scope	3
1.3	Applicability	3
1.4	Reference Documents	3
2.	PRECAUTIONS AND LIMITATIONS	3
3.	PREREQUISITE ACTIONS	4
4.	NORMAL STARTUP OPERATION OF MCC-3E	4
4.1	Startup Preparations	4
4.2	Switching Operations	5
4.3	Monitoring	5
5.	NORMAL SHUTDOWN OPERATION OF MCC-3E	5
5.1	Shutdown Preparations	5
5.2	Switching Operations	5
5.3	Verification	6
6.	ISOLATION PROCEDURE OF MCC-3E	6
6.1	Coordination of Operations	6
6.2	Switching Operations	6
6.3	Securing the Equipment	6
7.	AUTOMATIC SHUTDOWN OF MCC-3E	7
7.1	Shutdown Investigation	7
7.2	Switching and Isolation Operations	8
8.	RECORDS	8
Appendix A	MCC-3E One-Line Diagram	9
Appendix B	MCC-3E Front Elevation	10
Appendix C	Electrical Loads Associated with MCC-3E	11

1. INTRODUCTION.

Motor Control Center No. 3E (MCC-3E) is located outdoors in a NEMA type 3R rainproof enclosure south of the water treatment area. MCC-3E is a 480-volt, three-phase, three-wire system with a 600-ampere bus. MCC-3E is fed from 480V MCC-2 (compartment 3FAL). MCC-3E is used to distribute 480-volt, three-phase power to critical 480-volt loads. See Appendixes A, B, and C.

1.1 **Purpose.** This procedure provides step-by-step operations which shall be performed to safely and efficiently operate MCC-3E.

1.2 **Scope.** This procedure provides directions to an authorized electrician for the performance of the following activities under normal conditions:

A. Start up MCC-3E.

B. Shut down MCC-3E.

C. Isolate MCC-3E.

D. Investigate an automatic shutdown of MCC-3E.

1.3 **Applicability.** The activities described in this procedure shall be performed by an authorized electrician at the request of the supervisor.

1.4 **Reference Documents.**

A. Block Diagram Power Distribution, drawing SJ-E-302-018.

B. One-Line Diagram 480V MCC-2, MCC-3 & 3E, drawing SJ-E-302-059.

C. Work package 019 00, 480V Motor Control Center MCC-2.

2. PRECAUTIONS AND LIMITATIONS.

The following precautions and limitations apply to the operation of MCC-3E:

A. All nonessential personnel shall maintain a minimum distance of 10 feet from MCC-3E when power is first applied, until startup is complete.

B. The power source for MCC-3E is MCC-2. The nominal phase-to-phase voltage from MCC-2 is 480 volts (460V to 510V acceptable).

C. If rain is imminent or is falling, the doors to the MCC-3E enclosures shall remain closed to prevent water entry.

3. **PREREQUISITE ACTIONS.**

The following prerequisite actions shall be accomplished prior to the operation of MCC-3E:

A. Review the job safety analysis (JSA), if applicable, on this equipment for potential safety hazards and review associated one-line diagrams with the supervisor.

B. The supervisor shall verify that routine preventive maintenance has been performed on MCC-3E and its components as described in the applicable maintenance requirement card (MRC).

C. The operations shift supervisor shall ensure all clearance orders (Safe Work Permits) associated with MCC-3E have been issued.

D. Visually inspect MCC-3E and MCC-2 (compartment 3FAL) for any evidence of moisture, rodents, or other signs of damage. Report same to supervisor.

E. Visually check for any temporary wiring, grounds, locks, or tags. All findings shall be reported to the control room operator and the supervisor.

F. Site operations personnel shall verify equipment status and install or remove locks and tags as necessary.

4. **NORMAL STARTUP OPERATION OF MCC-3E.**

A normal startup operation is performed when 480V power is applied to MCC-3E from MCC-2. The following steps shall be executed to complete MCC-3E startup.

4.1 **Startup Preparations.**

[1] Obtain an electrical switching order (ESO) from the supervisor.

[2] Clear the area around MCC-3E of all nonessential personnel until startup is complete.

[3] At MCC-3E, verify that all circuit breakers are in the OFF position.

4.2 Switching Operations.

[1] Notify the control room operator that MCC-3E is being energized.

[2] At MCC-2 (compartment 3FAL), turn the handle of the MCC-3E feeder breaker to the ON position.

4.3 Monitoring.

[1] At MCC-3E (compartment 1FA), using the panel-mounted voltmeter, verify that phase-to-phase bus voltages are nominally 480 volts (460V to 510V acceptable).

NOTE

MCC-3E is now energized and available for startup of other 480V equipment.

[2] Notify the control room operator that MCC-3E is now energized.

5. NORMAL SHUTDOWN OPERATION OF MCC-3E.

A normal shutdown operation is performed when 480V power is removed from MCC-3E. The following steps shall be executed to complete MCC-3E shutdown.

5.1 Shutdown Preparations.

[1] Obtain an electrical switching order (ESO) from the supervisor.

[2] Clear the area around MCC-3E of all nonessential personnel until shutdown is complete.

[3] At MCC-3E, verify that all circuits are de-energized by visually checking the position of all circuit breakers. Notify the supervisor of any remaining energized circuits.

5.2 Switching Operations.

[1] Notify the control room operator that MCC-3E is being de-energized.

[2] At MCC-2 (compartment 3FAL), turn the handle of the MCC-3E feeder breaker to the OFF position.

5.3 Verification.

[1] At MCC-3E (compartment 1FA), using the panel-mounted voltmeter, verify that phase-to-phase bus voltages are zero.

NOTE
MCC-3E is now de-energized.

[2] Notify the control room operator that MCC-3E is now de-energized.

6. ISOLATION PROCEDURE OF MCC-3E.

Isolation of MCC-3E will prevent normal startup operation of MCC-3E. The following steps shall be executed only after MCC-3E shutdown operation (paragraph 5 above) is complete.

6.1 Coordination of Operations.

[1] Obtain an electrical switching order (ESO) from the supervisor.

[2] Notify the control room operator that MCC-3E is being isolated.

6.2 Switching Operations.

[1] At MCC-3E (compartment 1FA), using the panel-mounted voltmeter, verify that phase-to-phase bus voltages are zero.

NOTE
MCC-3E is now isolated.

[2] Notify the control room operator that MCC-3E is now isolated.

6.3 Securing the Equipment.

WARNING

Failure to lock out the MCC-3E feeder breaker will create a potential hazard for personnel performing maintenance on MCC-3E.

[1] At MCC-2 (compartment 3FAL), attach a lock and tag to the handle of the OFF MCC-3E feeder breaker.

[2] Log all locks and tags installed as part of the isolation procedure.

NOTE 1
MCC-3E is now secured for maintenance.

NOTE 2
The number of each lock and tag as well as the name of the person who installed them shall be entered in the lockout/tagout log.

NOTE 3
A clearance order (Safe Work Permit) shall be obtained from the operations shift supervisor prior to start of work.

[3] Notify control room operator that MCC-3E is now secured for maintenance.

7. AUTOMATIC SHUTDOWN OF MCC-3E.

An automatic shutdown of MCC-3E occurs when protective devices detect an abnormal condition and trip open the MCC-3E feeder breaker. In the event of an automatic shutdown, the following steps shall be executed to assist maintenance personnel in determining the cause of the shutdown.

7.1 Shutdown Investigation.

[1] Notify the control room operator that MCC-3E has automatically shutdown and is being investigated.

WARNING

Due to the unknown nature or exact location of the condition which caused the automatic shutdown, all nonessential personnel shall stay clear of power distribution equipment associated with MCC-3E.

[2] Clear the area around MCC-3E of all nonessential personnel until isolation procedure is complete.

[3] Inspect the exterior of MCC-3E and MCC-2 (compartment 3FAL) for any signs of damage or conditions which may affect the system operation.

[4] At MCC-3E, record the status of the following items:

[a] Phase-to-phase bus voltages on the panel-mounted voltmeter.

[b] All branch circuit breakers that have tripped.

[5] At MCC-2 (compartment 3FAL), record the status of the MCC-3E feeder breaker - on, trip, or off.

7.2 Switching and Isolation Operations.

[1] If the MCC-3E feeder breaker at MCC-2 has tripped open, then isolate per paragraph 6 above.

[2] Report all findings and actions taken to the supervisor.

8. RECORDS.

A. Any locks or tags attached to or removed from MCC-3E or MCC-2 shall be entered in the lockout/tagout log.

B. Any findings of abnormal conditions shall be noted and reported to the control room operator, the supervisor, and the maintenance manager. A work request shall be initiated to correct the problem.

APPENDIX A

MCC-3E ONE-LINE DIAGRAM

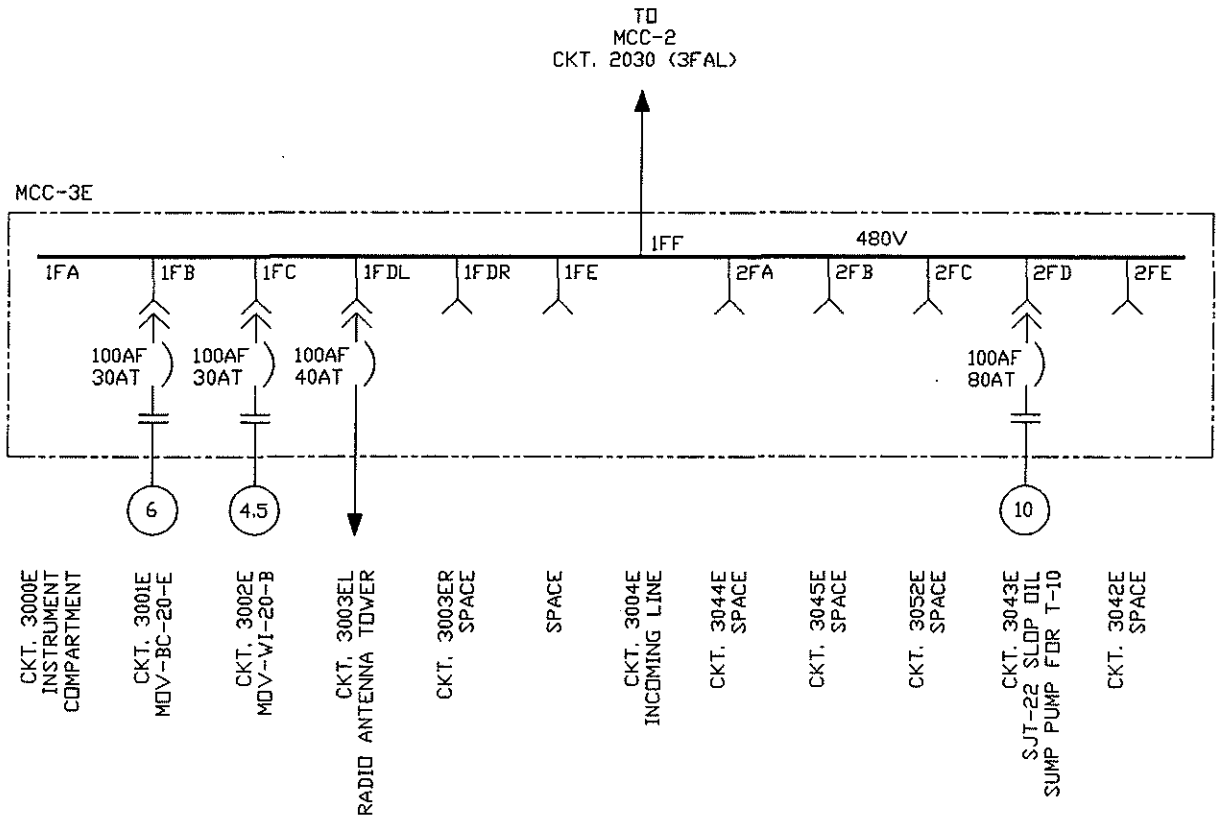

APPENDIX B

MCC-3E FRONT ELEVATION

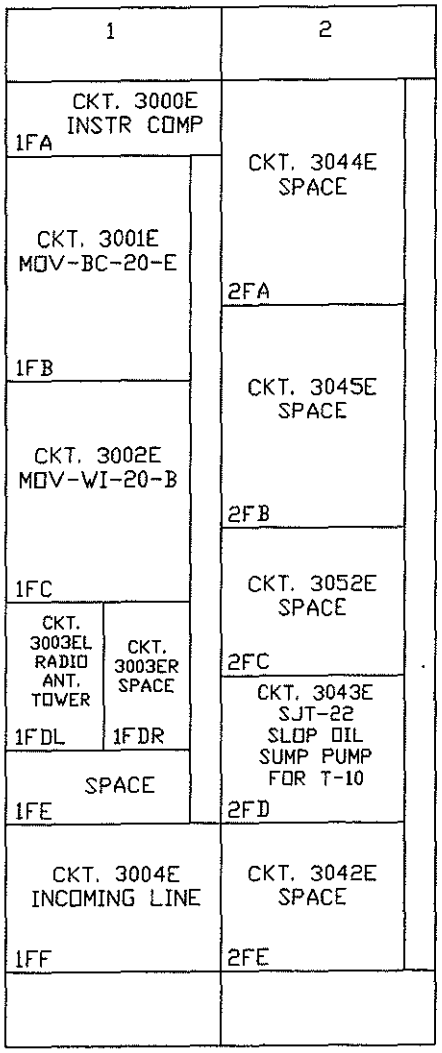

APPENDIX C

ELECTRICAL LOADS ASSOCIATED WITH MCC-3E

The following list of electrical loads are fed from MCC-3E and will be affected by normal shutdown or automatic shutdown of MCC-3E:

MOV-BC-20-E.
MOV-WI-20-B.
Radio antenna tower.
SJT-22 Slop oil sump pump for tank T-10.

NORMAL OPERATING PROCEDURE

SAINT JAMES SITE

480V MOTOR CONTROL CENTER MCC-4E

NORMAL OPERATING PROCEDURE

SAINT JAMES SITE

480V MOTOR CONTROL CENTER MCC-4E

List of Effective Work Package Pages

Page No.	Chg. No.	Page No.	Chg. No.	Page No.	Chg. No.
1 thru 11	0	12(Blank)	0		

Record of Applicable Technical Directives

None

TABLE OF CONTENTS

Para.	Title	Page
1.	INTRODUCTION	3
1.1	Purpose	3
1.2	Scope	3
1.3	Applicability	3
1.4	Reference Documents	3
2.	PRECAUTIONS AND LIMITATIONS	3
3.	PREREQUISITE ACTIONS	4
4.	NORMAL STARTUP OPERATION OF MCC-4E	4
4.1	Startup Preparations	4
4.2	Switching Operations	5
4.3	Monitoring	5
5.	NORMAL SHUTDOWN OPERATION OF MCC-4E	5
5.1	Shutdown Preparations	5
5.2	Switching Operations	5
5.3	Verification	6
6.	ISOLATION PROCEDURE OF MCC-4E	6
6.1	Coordination of Operations	6
6.2	Switching Operations	6
6.3	Securing the Equipment	6
7.	AUTOMATIC SHUTDOWN OF MCC-4E	7
7.1	Shutdown Investigation	7
7.2	Switching and Isolation Operations	8
8.	RECORDS	8
Appendix A	MCC-4E One-Line Diagram	9
Appendix B	MCC-4E Front Elevation	10
Appendix C	Electrical Loads Associated with MCC-4E	11

1. INTRODUCTION.

Motor Control Center No. 4E (MCC-4E) is located outdoors in a NEMA type 3R rainproof enclosure south of the metering station. MCC-4E is a 480-volt, three-phase, three-wire system with a 600-ampere bus. MCC-4E is fed from 480V MCC-2 (compartment 3FAR). MCC-4E is used to distribute 480-volt, three-phase power to critical 480-volt loads. See Appendixes A, B, and C.

1.1 **Purpose.** This procedure provides step-by-step operations which shall be performed to safely and efficiently operate MCC-4E.

1.2 **Scope.** This procedure provides directions to an authorized electrician for the performance of the following activities under normal conditions:

A. Start up MCC-4E.

B. Shut down MCC-4E.

C. Isolate MCC-4E.

D. Investigate an automatic shutdown of MCC-4E.

1.3 **Applicability.** The activities described in this procedure shall be performed by an authorized electrician at the request of the supervisor.

1.4 **Reference Documents.**

A. Block Diagram Power Distribution, drawing SJ-E-302-018.

B. One-Line Diagram 480V MCC-2, MCC-3 & 3E, drawing SJ-E-302-059.

C. One-Line Diagram 480V MCC-4 and MCC-4E, drawing SJ-E-302-060.

D. Work package 019 00, 480V Motor Control Center MCC-2.

2. PRECAUTIONS AND LIMITATIONS.

The following precautions and limitations apply to the operation of MCC-4E:

A. All nonessential personnel shall maintain a minimum distance of 10 feet from MCC-4E when power is first applied, until startup is complete.

B. The power source for MCC-4E is MCC-2. The nominal phase-to-phase voltage from MCC-2 is 480 volts (460V to 510V acceptable).

C. If rain is imminent or is falling, the doors to the MCC-4E enclosures shall remain closed to prevent water entry.

3. **PREREQUISITE ACTIONS.**

The following prerequisite actions shall be accomplished prior to the operation of MCC-4E:

A. Review the job safety analysis (JSA), if applicable, on this equipment for potential safety hazards and review associated one-line diagrams with the supervisor.

B. The supervisor shall verify that routine preventive maintenance has been performed on MCC-4E and its components as described in the applicable maintenance requirement card (MRC).

C. The operations shift supervisor shall ensure all clearance orders (Safe Work Permits) associated with MCC-4E have been issued.

D. Visually inspect MCC-4E and MCC-2 (compartment 3FAR) for any evidence of moisture, rodents, or other signs of damage. Report same to supervisor.

E. Visually check for any temporary wiring, grounds, locks, or tags. All findings shall be reported to the control room operator and the supervisor.

F. Site operations personnel shall verify equipment status and install or remove locks and tags as necessary.

4. **NORMAL STARTUP OPERATION OF MCC-4E.**

A normal startup operation is performed when 480V power is applied to MCC-4E from MCC-2. The following steps shall be executed to complete MCC-4E startup.

4.1 **Startup Preparations.**

[1] Obtain an electrical switching order (ESO) from the supervisor.

[2] Clear the area around MCC-4E of all nonessential personnel until startup is complete.

[3] At MCC-4E, verify that all circuit breakers are in the OFF position.

4.2 Switching Operations.

[1] Notify the control room operator that MCC-4E is being energized.

[2] At MCC-2 (compartment 3FAR), turn the handle of the MCC-4E feeder breaker to the ON position.

4.3 Monitoring.

[1] At MCC-4E (compartment 1FA), using the panel-mounted voltmeter, verify that phase-to-phase bus voltages are nominally 480 volts (460V to 510V acceptable).

NOTE

MCC-4E is now energized and available for startup of other 480V equipment.

[2] Notify the control room operator that MCC-4E is now energized.

5. NORMAL SHUTDOWN OPERATION OF MCC-4E.

A normal shutdown operation is performed when 480V power is removed from MCC-4E. The following steps shall be executed to complete MCC-4E shutdown.

5.1 Shutdown Preparations.

[1] Obtain an electrical switching order (ESO) from the supervisor.

[2] Clear the area around MCC-4E of all nonessential personnel until shutdown is complete.

[3] At MCC-4E, verify that all circuits are de-energized by visually checking the position of all circuit breakers. Notify the supervisor of any remaining energized circuits.

5.2 Switching Operations.

[1] Notify the control room operator that MCC-4E is being de-energized.

[2] At MCC-2 (compartment 3FAR), turn the handle of the MCC-4E feeder breaker to the OFF position.

5.3 Verification.

[1] At MCC-4E (compartment 1FA), using the panel-mounted voltmeter, verify that phase-to-phase bus voltages are zero.

NOTE
MCC-4E is now de-energized.

[2] Notify the control room operator that MCC-4E is now de-energized.

6. ISOLATION PROCEDURE OF MCC-4E.

Isolation of MCC-4E will prevent normal startup operation of MCC-4E. The following steps shall be executed only after MCC-4E shutdown operation (paragraph 5 above) is complete.

6.1 Coordination of Operations.

[1] Obtain an electrical switching order (ESO) from the supervisor.

[2] Notify the control room operator that MCC-4E is being isolated.

6.2 Switching Operations.

[1] At MCC-4E (compartment 1FA), using the panel-mounted voltmeter, verify that phase-to-phase bus voltages are zero.

NOTE
MCC-4E is now isolated.

[2] Notify the control room operator that MCC-4E is now isolated.

6.3 Securing the Equipment.

WARNING

Failure to lock out the MCC-4E feeder breaker will create a potential hazard for personnel performing maintenance on MCC-4E.

[1] At MCC-2 (compartment 3FAR), attach a lock and tag to the handle of the OFF MCC-4E feeder breaker.

[2] Log all locks and tags installed as part of the isolation procedure.

NOTE 1
MCC-4E is now secured for maintenance.

NOTE 2
The number of each lock and tag as well as the name of the person who installed them shall be entered in the lockout/tagout log.

NOTE 3
A clearance order (Safe Work Permit) shall be obtained from the operations shift supervisor prior to start of work.

[3] Notify control room operator that MCC-4E is now secured for maintenance.

7. AUTOMATIC SHUTDOWN OF MCC-4E.

An automatic shutdown of MCC-4E occurs when protective devices detect an abnormal condition and trip open the MCC-4E feeder breaker. In the event of an automatic shutdown, the following steps shall be executed to assist maintenance personnel in determining the cause of the shutdown.

7.1 Shutdown Investigation.

[1] Notify the control room operator that MCC-4E has automatically shutdown and is being investigated.

WARNING

Due to the unknown nature or exact location of the condition which caused the automatic shutdown, all nonessential personnel shall stay clear of power distribution equipment associated with MCC-4E.

[2] Clear the area around MCC-4E of all nonessential personnel until isolation procedure is complete.

[3] Inspect the exterior of MCC-4E and MCC-2 (compartment 3FAR) for any signs of damage or conditions which may affect the system operation.

[4] At MCC-4E, record the status of the following items:

[a] Phase-to-phase bus voltages on the panel-mounted voltmeter.

[b] All branch circuit breakers that have tripped.

[5] At MCC-2 (compartment 3FAR), record the status of the MCC-4E feeder breaker - on, trip, or off.

7.2 Switching and Isolation Operations.

[1] If the MCC-4E feeder breaker at MCC-2 has tripped open, then isolate per paragraph 6 above.

[2] Report all findings and actions taken to the supervisor.

8. RECORDS.

A. Any locks or tags attached to or removed from MCC-4E or MCC-2 shall be entered in the lockout/tagout log.

B. Any findings of abnormal conditions shall be noted and reported to the control room operator, the supervisor, and the maintenance manager. A work request shall be initiated to correct the problem.

APPENDIX A

MCC-4E ONE-LINE DIAGRAM

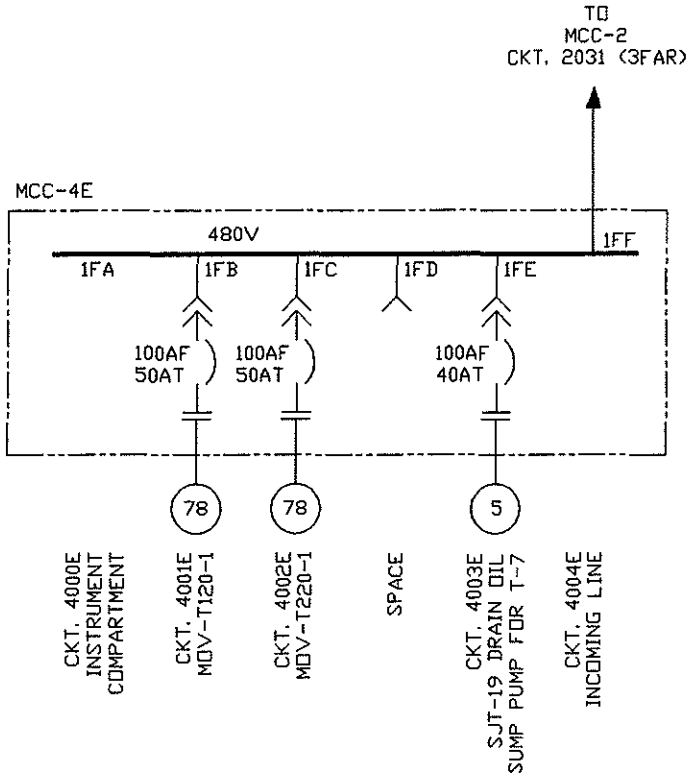

APPENDIX B

MCC-4E FRONT ELEVATION

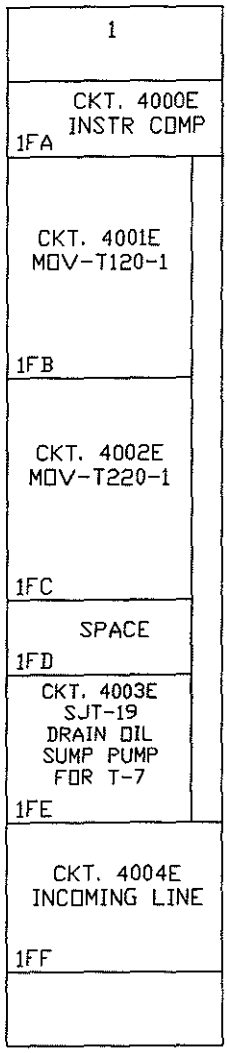

APPENDIX C

ELECTRICAL LOADS ASSOCIATED WITH MCC-4E

The following list of electrical loads are fed from MCC-4E and will be affected by normal shutdown or automatic shutdown of MCC-4E:

MOV-T120-1.
MOV-T220-1.
SJT-19 Drain oil sump pump for tank T-7.

NORMAL OPERATING PROCEDURE

SAINT JAMES SITE

480V MOTOR CONTROL CENTER MCC-5E

NORMAL OPERATING PROCEDURE

SAINT JAMES SITE

480V MOTOR CONTROL CENTER MCC-5E

List of Effective Work Package Pages

Page Number	Revision Number	Page Number	Revision Number
1 thru 10	2		

Record of Applicable Technical Directives

None

TABLE OF CONTENTS

Para.	Title	Page
1.	INTRODUCTION	3
1.1	Purpose	3
1.2	Scope	3
1.3	Applicability	3
1.4	Reference Documents	3
2.	PRECAUTIONS AND LIMITATIONS	3
3.	PREREQUISITE ACTIONS	4
4.	NORMAL STARTUP OPERATION OF MCC-5E	4
4.1	Startup Preparations	4
4.2	Switching Operations	4
4.3	Monitoring	5
5.	NORMAL SHUTDOWN OPERATION OF MCC-5E	5
5.1	Shutdown Preparations	5
5.2	Switching Operations	5
5.3	Verification	5
6.	ISOLATION PROCEDURE OF MCC-5E	5
6.1	Coordination of Operations	6
6.2	Switching Operations	6
6.3	Securing the Equipment	6
7.	AUTOMATIC SHUTDOWN OF MCC-5E	6
7.1	Shutdown Investigation	7
7.2	Switching and Isolation Operations	7
8.	RECORDS	7
Appendix A	One-Line Diagram	8
Appendix B	Elevation	9
Appendix C	Electrical Loads	10

1. INTRODUCTION.

Motor Control Center No. 5E (MCC-5E) is located outdoors in a NEMA type 3R rainproof enclosure west of permanent facility building no. 702. MCC-5E is a 480-volt, three-phase, three-wire system with a 600-ampere bus. MCC-5E is fed from 480V MCC-2 (compartment 1FD). MCC-5E is used to distribute 480-volt, three-phase power to critical 480-volt loads. See Appendixes A, B, and C.

1.1 **Purpose.** This procedure provides step-by-step operations which shall be performed to safely and efficiently operate MCC-5E.

1.2 **Scope.** This procedure provides directions to an authorized electrician for the performance of the following activities under normal conditions:

A. Start up MCC-5E.

B. Shut down MCC-5E.

C. Isolate MCC-5E.

D. Investigate an automatic shutdown of MCC-5E.

1.3 **Applicability.** The activities described in this procedure shall be performed by an authorized electrician at the request of the supervisor.

1.4 **Reference Documents.**

A. Block Diagram Power Distribution, drawing SJ-E-302-018.

B. One-Line Diagram 480V MCC-2, MCC-3 & 3E, drawing SJ-E-302-059.

C. One-Line Diagram 480V MCC-5, 5E, 6, & 5A, drawing SJ-E-302-061.

D. Work package 019 00, 480V Motor Control Center MCC-2.

2. PRECAUTIONS AND LIMITATIONS.

The following precautions and limitations apply to the operation of MCC-5E:

A. All nonessential personnel shall maintain a minimum distance of 10 feet from MCC-5E when power is first applied, until startup is complete.

B. The power source for MCC-5E is MCC-2. The nominal phase-to-phase voltage from MCC-2 is 480 volts (460V to 510V acceptable).

C. If rain is imminent or is falling, the doors to the MCC-5E enclosures shall remain closed to prevent water entry.

3. PREREQUISITE ACTIONS.

The following prerequisite actions shall be accomplished prior to the operation of MCC-5E:

A. Review the job safety analysis (JSA), if applicable, on this equipment for potential safety hazards and review associated one-line diagrams with the supervisor.

B. The supervisor shall verify that routine preventive maintenance has been performed on MCC-5E and its components as described in the applicable maintenance requirement card (MRC).

C. The operations shift supervisor shall ensure all clearance orders (Safe Work Permits) associated with MCC-5E have been issued.

D. Visually inspect MCC-5E and MCC-2 (compartment 1FD) for any evidence of moisture, rodents, or other signs of damage. Report same to supervisor.

E. Visually check for any temporary wiring, grounds, locks, or tags. All findings shall be reported to the control room operator and the supervisor.

F. Site operations personnel shall verify equipment status and install or remove locks and tags as necessary.

4. NORMAL STARTUP OPERATION OF MCC-5E.

A normal startup operation is performed when 480V power is applied to MCC-5E from MCC-2. The following steps shall be executed to complete MCC-5E startup.

4.1 Startup Preparations.

[1] Obtain an electrical switching order (ESO) from the supervisor.

[2] Clear the area around MCC-5E of all nonessential personnel until startup is complete.

[3] At MCC-5E, verify that all circuit breakers are in the OFF position.

4.2 Switching Operations.

[1] Notify the control room operator that MCC-5E is being energized.

[2] At MCC-2 (compartment 1FD), turn the handle of the MCC-5E feeder breaker to the ON position.

4.3 Monitoring.

[1] At MCC-5E (compartment 1FA), using the panel-mounted voltmeter, verify that phase-to-phase bus voltages are nominally 480 volts (460V to 510V acceptable).

NOTE
MCC-5E is now energized and available for startup of other 480V equipment.

[2] Notify the control room operator that MCC-5E is now energized.

5. NORMAL SHUTDOWN OPERATION OF MCC-5E.

A normal shutdown operation is performed when 480V power is removed from MCC-5E. The following steps shall be executed to complete MCC-5E shutdown.

5.1 Shutdown Preparations.

[1] Obtain an electrical switching order (ESO) from the supervisor.

[2] Clear the area around MCC-5E of all nonessential personnel until shutdown is complete.

[3] At MCC-5E, verify that all circuits are de-energized by visually checking the position of all circuit breakers. Notify the supervisor of any remaining energized circuits.

5.2 Switching Operations.

[1] Notify the control room operator that MCC-5E is being de-energized.

[2] At MCC-2 (compartment 1FD), turn the handle of the MCC-5E feeder breaker to the OFF position.

5.3 Verification.

[1] At MCC-5E (compartment 1FA), using the panel-mounted voltmeter, verify that phase-to-phase bus voltages are zero.

NOTE
MCC-5E is now de-energized.

[2] Notify the control room operator that MCC-5E is now de-energized.

6. ISOLATION PROCEDURE OF MCC-5E.

Isolation of MCC-5E will prevent normal startup operation of MCC-5E. The following steps shall be executed only after MCC-5E shutdown operation (paragraph 5 above) is complete.

6.1 Coordination of Operations.

[1] Obtain an electrical switching order (ESO) from the supervisor.

[2] Notify the control room operator that MCC-5E is being isolated.

6.2 Switching Operations.

[1] At MCC-5E (compartment 1FA), using the panel-mounted voltmeter, verify that phase-to-phase bus voltages are zero.

NOTE
MCC-5E is now isolated.

[2] Notify the control room operator that MCC-5E is now isolated.

6.3 Securing the Equipment.

WARNING

Failure to lock out the MCC-5E feeder breaker will create a potential hazard for personnel performing maintenance on MCC-5E.

[1] At MCC-2 (compartment 1FD), attach a lock and tag to the handle of the OFF MCC-5E feeder breaker.

[2] Log all locks and tags installed as part of the isolation procedure.

NOTE 1
MCC-5E is now secured for maintenance.

NOTE 2
The number of each lock and tag as well as the name of the person who installed them shall be entered in the lockout/tagout log.

NOTE 3
A clearance order (Safe Work Permit) shall be obtained from the operations shift supervisor prior to start of work.

[3] Notify control room operator that MCC-5E is now secured for maintenance.

7. AUTOMATIC SHUTDOWN OF MCC-5E.

An automatic shutdown of MCC-5E occurs when protective devices detect an abnormal condition and trip open the MCC-5E feeder breaker. In the event of an automatic shutdown, the following steps shall be executed to assist maintenance personnel in determining the cause of the shutdown.

7.1 Shutdown Investigation.

[1] Notify the control room operator that MCC-5E has automatically shutdown and is being investigated.

WARNING

Due to the unknown nature or exact location of the condition which caused the automatic shutdown, all nonessential personnel shall stay clear of power distribution equipment associated with MCC-5E.

[2] Clear the area around MCC-5E of all nonessential personnel until isolation procedure is complete.

[3] Inspect the exterior of MCC-5E and MCC-2 (compartment 1FD) for any signs of damage or conditions which may affect the system operation.

[4] At MCC-5E, record the status of the following items:

[a] Phase-to-phase bus voltages on the panel-mounted voltmeter.

[b] All branch circuit breakers that have tripped.

[5] At MCC-2 (compartment 1FD), record the status of the feeder breaker - on, trip, or off.

7.2 Switching and Isolation Operations.

[1] If the MCC-5E feeder breaker at MCC-2 has tripped open, then isolate per paragraph 6 above.

[2] Report all findings and actions taken to the supervisor.

8. RECORDS.

A. Any locks or tags attached to or removed from MCC-5E or MCC-2 shall be entered in the lockout/tagout log.

B. Any findings of abnormal conditions shall be noted and reported to the control room operator, the supervisor, and the maintenance manager. A work request shall be initiated to correct the problem.

APPENDIX A

ONE-LINE DIAGRAM

MCC-5E

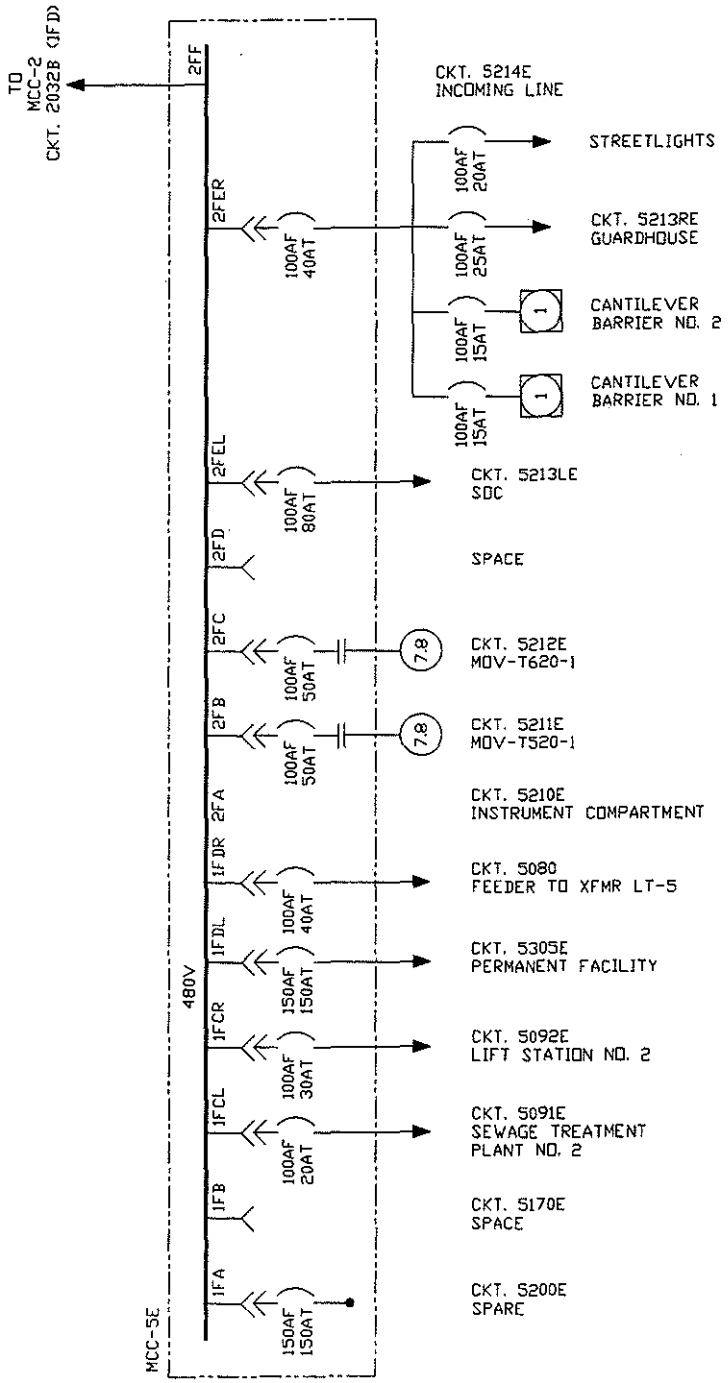

APPENDIX B

ELEVATION

MCC-5E

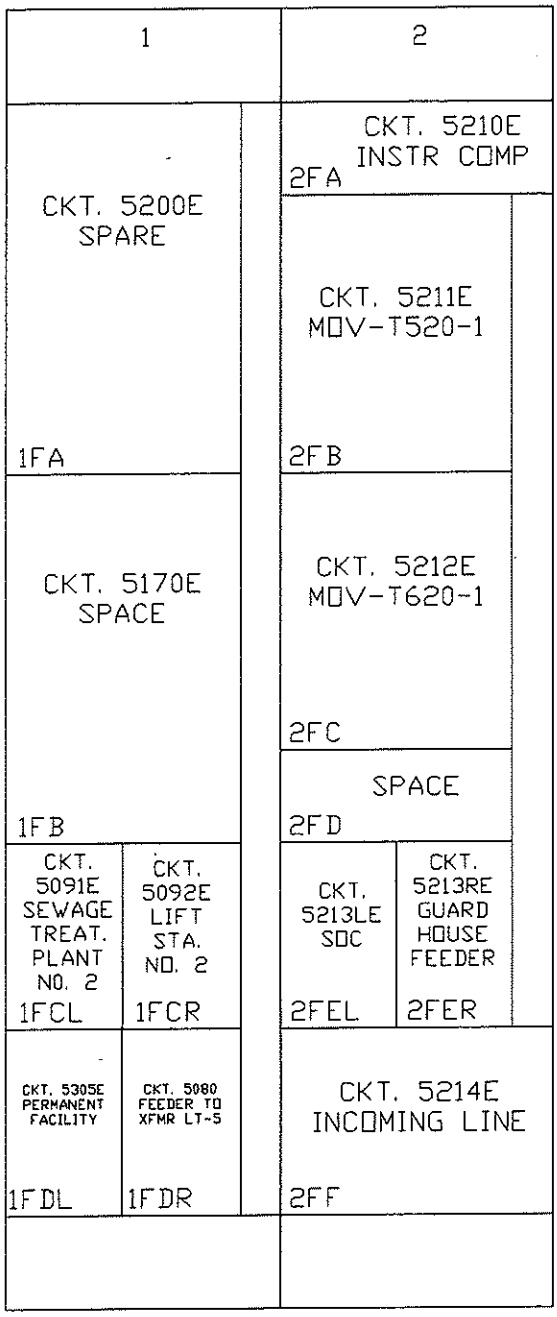

APPENDIX C

ELECTRICAL LOADS

The following list of electrical loads are fed from MCC-5E and will be affected by normal shutdown or automatic shutdown of MCC-5E:

Sewage treatment plant no. 2.
Lift station no. 2.
Permanent facility.
LP-5 Lighting panel via 15KVA transformer LT-5.
MOV-T520-1.
MOV-T620-1.
Security Operations Center (SOC).
Guardhouse.
Streetlights.
Cantilever barrier no. 1.
Cantilever barrier no. 2.

NORMAL OPERATING PROCEDURE

SAINT JAMES SITE

UNINTERRUPTIBLE POWER SUPPLY SYSTEM

NORMAL OPERATING PROCEDURE

SAINT JAMES SITE

UNINTERRUPTIBLE POWER SUPPLY SYSTEM

List of Effective Work Package Pages

Page No.	Chg. No.	Page No.	Chg. No.	Page No.	Chg. No.
1 thru 15	0	16(Blank)	0		

Record of Applicable Technical Directives

None

TABLE OF CONTENTS

Para.	Title	Page
1.	INTRODUCTION	3
1.1	Purpose	3
1.2	Scope	3
1.3	Applicability	3
1.4	Reference Documents	4
2.	PRECAUTIONS AND LIMITATIONS	4
3.	PREREQUISITE ACTIONS	4
4.	NORMAL STARTUP OPERATION OF UPS-1	5
4.1	Startup Preparations	5
4.2	Switching Operations	5
5.	NORMAL SHUTDOWN OPERATION OF UPS-1	7
5.1	Shutdown Preparations	7
5.2	Switching Operations	8
6.	ISOLATION PROCEDURE OF UPS-1	9
6.1	Coordination of Operations	9
6.2	Securing the Equipment	9
7.	AUTOMATIC SHUTDOWN OF UPS-1	10
8.	RECORDS	10
Appendix A	UPS-1 Block Diagram	11
Appendix B	UPS-1 Front Elevation	12
Appendix C	UPS-1 Controls and Indicators	13

1. INTRODUCTION.

Uninterruptible Power Supply No. 1 (UPS-1) is located in the motor control center room of building 704. UPS-1 receives normal and bypass power from MCC-2 and provides 120-volt, single-phase power to the Distributed Control System (DCS) and other critical loads. UPS-1 is a RTE Deltec model no. 5250A uninterruptible power supply.

The purpose of UPS-1 is to supply a reliable, steady source of power to the DCS and other critical loads during periods of low or absent line power. The basic system consists of a rectifier/battery charger, a DC to AC power inverter, and a maintenance bypass switch. Combined with an external battery bank, UPS-1 protects against a power line outage or low line voltage for the battery discharge time. The rectifier/battery charger converts AC voltage to DC voltage, which in turn charges the battery bank. The inverter converts the DC voltage back to AC voltage to feed the critical loads. The maintenance bypass switch, when in the BYPASS position, allows preventive maintenance to be performed on UPS-1 without losing power to the DCS and other critical loads. This is the maintenance bypass mode. The maintenance bypass switch is normally in the NORMAL position. See Appendixes A, B, and C.

If AC power is unusable, the UPS will automatically revert to battery operation. The 125VDC external battery bank is located in a battery room on the northeast end of the motor control center room of building 704.

1.1 Purpose. This procedure provides step-by-step operations which shall be performed to safely and efficiently operate the UPS system.

1.2 Scope. This procedure provides directions to an authorized electrician for the performance of the following activities under normal conditions:

A. Start up UPS-1.

B. Shut down UPS-1.

C. Isolate UPS-1.

D. Investigate an automatic shutdown of UPS-1.

1.3 Applicability. The activities described in this procedure shall be performed by an authorized electrician at the request of the supervisor.

1.4 Reference Documents.

A. Technical Manual for RTE Deltec 5000 Series Uninterruptible Power Supply (UPS).

B. Work package 017 00, 480V Motor Control Center MCC-1B.

C. Work package 019 00, 480V Motor Control Center MCC-2.

2. PRECAUTIONS AND LIMITATIONS.

The following precautions and limitations apply to the operation of UPS-1:

A. All nonessential personnel shall maintain a minimum distance of 10 feet from UPS-1 when power is first applied, until startup is complete.

B. The normal power source for UPS-1 is MCC-2. MCC-2 provides 480-volt, three-phase power to UPS-1. When UPS-1 is in the maintenance bypass mode, MCC-2 provides 120-volt, single-phase power to the DCS and critical loads via a step-down transformer located on the east wall of the motor control center room.

3. PREREQUISITE ACTIONS.

The following prerequisite actions shall be accomplished prior to operation of UPS-1:

A. Review the job safety analysis (JSA), if applicable, on this equipment for potential safety hazards and review associated one-line diagrams with the supervisor.

B. The supervisor shall verify that routine preventive maintenance has been performed on UPS-1 and its components as described in the applicable maintenance requirement card (MRC).

C. The operations shift supervisor shall ensure all clearance orders (Safe Work Permits) associated with UPS-1 have been issued.

D. Visually inspect UPS-1 and MCC-2 for any evidence of moisture, rodents, or any other signs of damage. Report same to supervisor.

E. Visually check for any temporary wiring, grounds, locks, or tags. All findings shall be reported to the control room operator and the supervisor.

F. Site operations personnel shall verify equipment status and install or remove locks and tags as necessary.

4. NORMAL STARTUP OPERATION OF UPS-1.

A normal startup operation is performed when 480V power is applied to UPS-1 from MCC-2. The following steps shall be executed to complete UPS-1 startup.

4.1 Startup Preparations.

[1] Obtain an electrical switching order (ESO) from the supervisor.

[2] Clear the area around UPS-1 of all nonessential personnel until startup is complete.

[3] At MCC-1B, using the panel-mounted voltmeter, verify that phase-to-phase bus voltages are nominally 480 volts. Report any phase-to-phase readings less than 460 volts to the supervisor.

[4] At MCC-2 (compartment 3FCR), verify that the UPS-1 feeder breaker is in the OFF position.

[5] At UPS-1, verify that all breakers are in the OFF position.

[6] Open the UPS-1 front cabinet door and verify that the maintenance bypass switch is in the BYPASS position.

[7] At the battery room entrance, verify that the battery bank disconnect switch (CB5) is in the OFF position.

4.2 Switching Operations.

[1] Notify the control room operator that UPS-1 is being energized.

[2] At the battery room entrance, rotate the battery bank disconnect switch (CB5) to the ON position. The status of UPS-1 is as follows:

[a] AC LINE - ALARM (red).

[b] BYPASS - ALARM (red).

[c] BATTERY CHARGER - NORMAL (green).

[d] INVERTER -

INPUT CIRCUIT - ALARM (red)

OUTPUT CIRCUIT - ALARM (red).

[e] OUTPUT MODE - INVERTER (green).

NOTE
No output voltage exists due to the inverter being off and no bypass available.

[3] At UPS-1, press the LAMP TEST button. All indicating lights should light. Replace lamps as required.

[4] At MCC-2 (compartment 3FCR), turn the UPS-1 feeder breaker to the ON position.

NOTE
AC LINE still indicates ALARM.

[5] Turn the BATTERY CHARGER output breaker (CB2) to the ON position. Wait 10-15 seconds to allow capacitors to charge.

[6] Turn the INPUT breaker (CB1) to the ON position. Wait one minute to allow the AC LINE ALARM indicating light to change from ALARM to NORMAL.

[7] Turn the INVERTER input breaker (CB3) to the ON position. The INVERTER INPUT CIRCUIT ALARM and OUTPUT CIRCUIT ALARM indicating lights will turn off.

[8] After the green INVERTER NORMAL indicating light illuminates, turn the bypass reference toggle switch, located next to the maintenance bypass switch, to the ON position.

[9] Wait one minute. The green OUTPUT MODE SYNC and green OUTPUT MODE INVERTER indicating lights will illuminate and the BYPASS indicating light will change from ALARM to NORMAL.

[10] Turn the OUTPUT breaker (CB4) to the ON position.

[11] Press the MANUAL TRANSFER button one time. The amber OUTPUT MODE LINE indicating light will illuminate and the green OUTPUT MODE INVERTER indicating light will turn off.

NOTE

UPS-1 is in the maintenance bypass mode. The DCS and other critical loads are fed from MCC-2 via the bypass line.

[12] Turn the maintenance bypass switch from the BYPASS position to the NORMAL position.

[13] Press the MANUAL TRANSFER button one time. The green OUTPUT MODE INVERTER indicating light will illuminate and the amber OUTPUT MODE LINE indicating light will turn off.

NOTE 1

If the OUTPUT MODE indicating light switches from INVERTER to LINE, and does not return to INVERTER, press the MANUAL TRANSFER button two times to transfer the OUTPUT MODE to INVERTER.

NOTE 2

UPS-1 is now in the INVERTER mode.

WARNING

Batteries release hydrogen gas which is highly flammable and explosive. Adequate ventilation must be maintained in the battery room at all times.

[14] Enter the battery room and verify that exhaust air exits through the roof.

NOTE

UPS-1 is now energized.

[15] Notify the control room operator that UPS-1 is now energized.

5. NORMAL SHUTDOWN OPERATION OF UPS-1.

When UPS-1 is in the maintenance bypass mode, the DCS and other critical loads will be fed from MCC-2 via the bypass line. A normal shutdown operation is performed when 480V power is removed from UPS-1. The following steps shall be executed to complete UPS-1 shutdown.

5.1 Shutdown Preparations.

[1] Obtain an electrical switching order (ESO) from the supervisor.

[2] At UPS-1, verify that the green OUTPUT MODE INVERTER indicating light is illuminated.

5.2 Switching Operations.

[1] Notify the control room operator that UPS-1 is being bypassed and de-energized.

NOTE
The DCS computer may go down and require program reload if power is lost.

[2] At UPS-1, press the MANUAL TRANSFER button one time. The amber OUTPUT MODE LINE indicating light will illuminate and the green OUTPUT MODE INVERTER indicating light will turn off.

NOTE
The static switch is now in the BYPASS mode.

[3] Open the UPS-1 front cabinet door and turn the maintenance bypass switch from the NORMAL position to the BYPASS position. The amber MECH BYPASS indicating light will illuminate.

NOTE
The DCS and other critical loads are fed from MCC-2 via the bypass line.

[4] Turn the OUTPUT breaker (CB4) to the OFF position.

[5] Turn the INVERTER input breaker (CB3) to the OFF position.

[6] Turn the bypass reference toggle switch, located next to the maintenance bypass switch, to the OFF position.

[7] Turn the INPUT breaker (CB1) to the OFF position.

[8] Turn the BATTERY CHARGER output breaker (CB2) to the OFF position.

[9] Turn the battery bank disconnect switch (CB5) to the OFF position.

NOTE
UPS-1 is in the maintenance bypass mode. Preventive maintenance can be performed on UPS-1 without losing power to the DCS and other critical loads.

CAUTION

Turning off the UPS-1 feeder breaker at MCC-2 will shut down the DCS and other critical loads.

[10] At MCC-2 (compartment 3FCR), turn the UPS-1 feeder breaker to the OFF position.

NOTE
UPS-1 is now de-energized.

[11] Notify the control room operator that UPS-1 is now de-energized.

6. ISOLATION PROCEDURE OF UPS-1.

Isolation of UPS-1 will prevent normal startup operation of UPS-1. The following steps shall be executed only after UPS-1 shutdown operation (paragraph 5 above) is complete.

6.1 Coordination of Operations.

[1] Obtain an electrical switching order (ESO) from the supervisor.

[2] Notify the control room operator that UPS-1 is being isolated.

6.2 Securing the Equipment.

WARNING

Failure to lock out the UPS-1 feeder breaker at MCC-2 will create a potential hazard for personnel performing maintenance on UPS-1.

[1] At MCC-2 (compartment 3FCR), attach a lock and a tag to the OFF UPS-1 feeder breaker.

[2] At the battery room entrance, attach a lock and tag to the OFF battery bank disconnect switch (CB5).

[3] Log all locks and tags installed as part of the isolation procedure.

NOTE 1
UPS-1 is now secured for maintenance.

NOTE 2
The number of each lock and tag as well as the name of the person who installed them shall be entered in the lockout/tagout log.

NOTE 3

A clearance order (Safe Work Permit) shall be obtained from the operations shift supervisor prior to start of work.

7. AUTOMATIC SHUTDOWN OF UPS-1.

An automatic shutdown of UPS-1 occurs when protective devices detect an abnormal condition and trip open the UPS-1 feeder breaker or the UPS-1 INPUT breaker. UPS-1 will automatically revert to battery power and the DCS and other critical loads will be fed from battery power for the battery discharge time.

In the event of an automatic shutdown, the control room operator shall notify the operation shift supervisor who shall take the appropriate actions.

8. RECORDS.

A. Any lock or tag attached to or removed from MCC-2 or the battery bank disconnect switch (CB5) shall be entered in the lockout/tagout log.

B. Any findings of abnormal conditions shall be noted and reported to the control room operator, the supervisor, and the maintenance manager. A work request shall be initiated to correct the problem.

APPENDIX A

UPS-1 BLOCK DIAGRAM

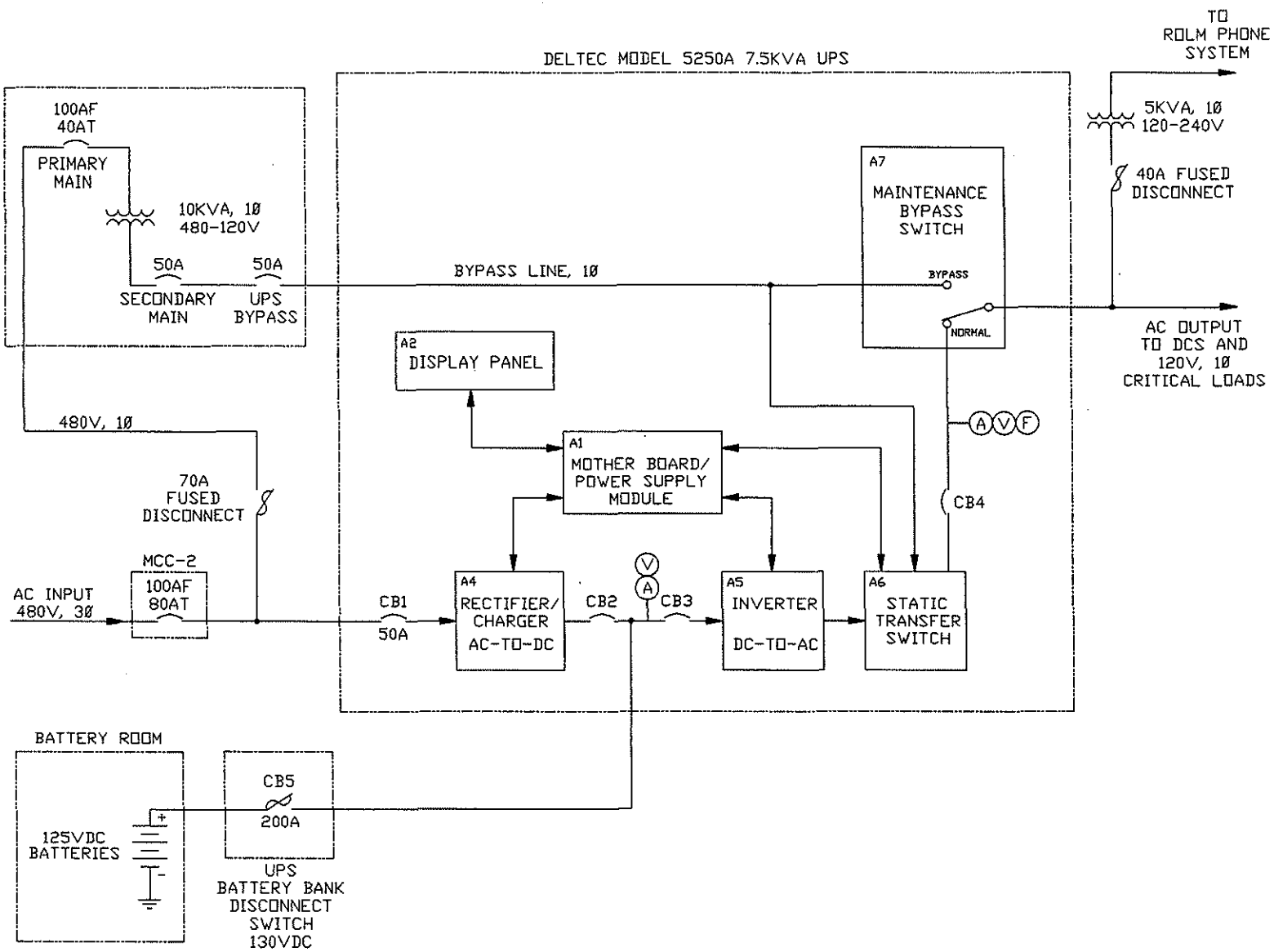

APPENDIX B

UPS-1 FRONT ELEVATION

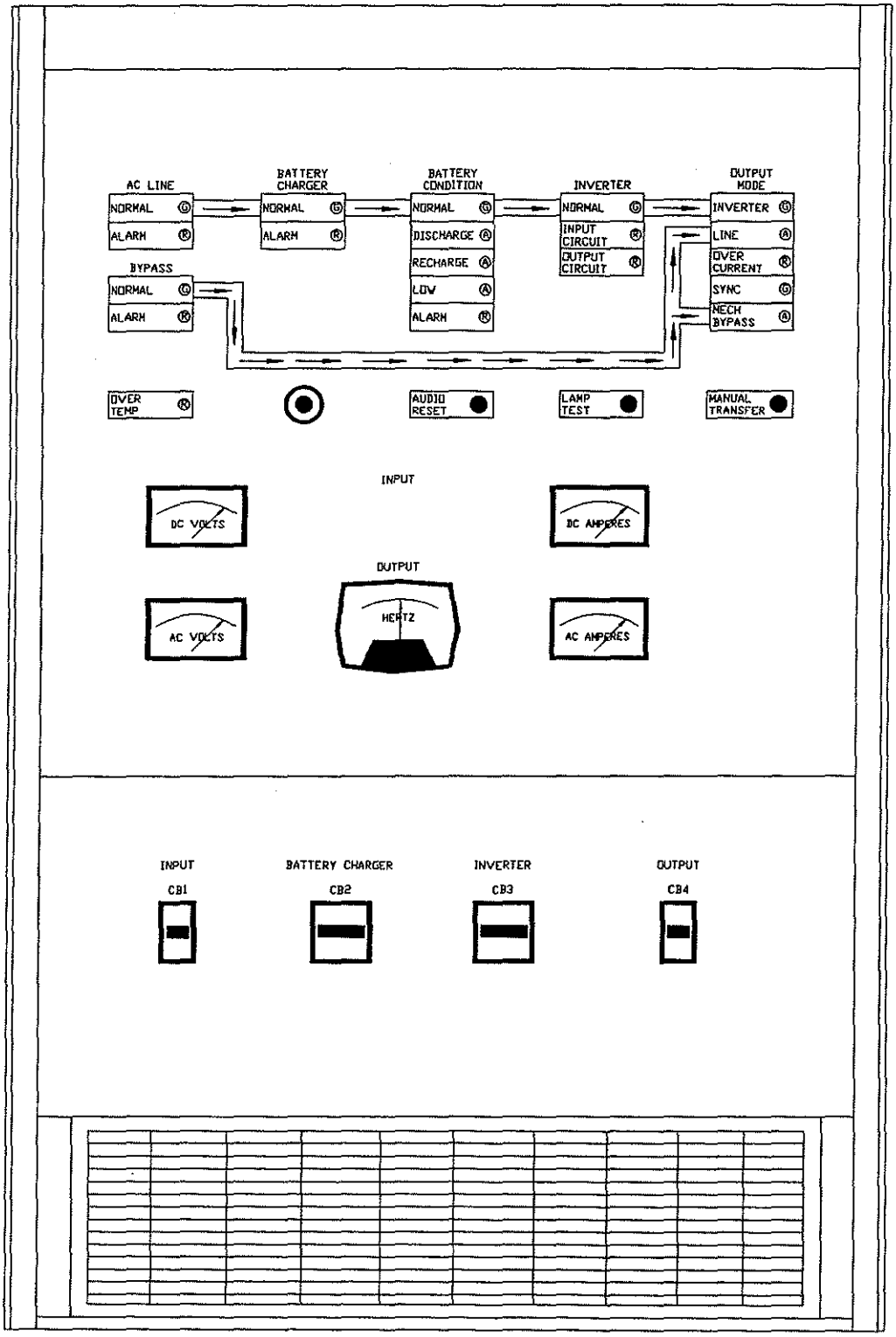

APPENDIX C

UPS-1 Controls and Indicators
(Sheet 1 of 3)

CONTROLS	DESCRIPTION
CIRCUIT BREAKERS:	
CB1 INPUT	AC input ON/OFF.
CB2 BATTERY CHARGER	Battery charger output ON/OFF.
CB3 INVERTER	Inverter input ON/OFF.
CB4 OUTPUT	AC output ON/OFF.
BUTTONS:	
AUDIO RESET	Silences the audio alarm.
LAMP TEST	Verifies the operation of all display panel LEDs.
MANUAL TRANSFER	Static switch transfers the load between INVERTER and LINE.

INDICATORS	DESCRIPTION
METERS:	
DC VOLTS	DC battery voltage, 0-150VDC.
DC AMPS	DC inverter current, 0-200A.
AC VOLTS	AC output voltage, 0-150VAC.
AC AMPS	AC output current, 0-200A.
HERTZ	Frequency, 55-65Hz.

APPENDIX C

UPS-1 Controls and Indicators
(Sheet 2)

INDICATORS	DESCRIPTION
STATUS LEDS:	
AC LINE	
NORMAL - GREEN	AC input is normal (120VAC).
ALARM - RED	AC input is below 90% of nominal (less than 108VAC).
BYPASS LINE	
NORMAL - GREEN	Bypass input is normal (120VAC).
ALARM - RED	Bypass input is below 85% of nominal (less than 102VAC).
BATTERY CHARGER	
NORMAL - GREEN	Battery charger output is normal (125VDC).
ALARM - RED	Battery charger output is greater than 152VDC or battery is discharging while AC LINE is normal.
BATTERY CONDITION	
NORMAL - GREEN	Battery voltage is between 108VDC and 152VDC.
DISCHARGE - AMBER	Battery is discharging.
RECHARGE - AMBER	Battery charging current is greater than 1 ampere.
LOW - AMBER	Battery voltage is less than 108VDC.
ALARM - RED	Battery voltage is greater than 152VDC or less than 105VDC.

APPENDIX C

UPS-1 Controls and Indicators
(Sheet 3)

INDICATORS	DESCRIPTION
STATUS LEDS:	
INVERTER	
NORMAL - GREEN	Inverter output is normal (120VAC).
INPUT CIRCUIT - RED	Inverter drive is abnormal or a sync error exists.
OUTPUT CIRCUIT - RED	Inverter output voltage is greater than 106% of nominal (127.2VAC) or less than 94% of nominal (112.8VAC).
OUTPUT MODE	
INVERTER - GREEN	The inverter is supplying the critical load.
LINE - AMBER	The bypass line is supplying the critical load.
OVERCURRENT - RED	The load current is greater than 130% of the UPS rating (81.25A).
SYNC - GREEN	The phase difference between the inverter AC and the bypass AC is less than 10°.
MECH BYPASS - AMBER	The maintenance bypass switch is in the BYPASS position.
OVER TEMP - RED	The battery charger, inverter, or static switch heat sink temperature is excessive.
HORN:	
AUDIO ALARM	Horn sounds when any of the visual status indicators signal an alarm condition.

NORMAL OPERATING PROCEDURE

SAINT JAMES SITE

480V MOTOR CONTROL CENTER MCC-5A

NORMAL OPERATING PROCEDURE

SAINT JAMES SITE

480V MOTOR CONTROL CENTER MCC-5A

List of Effective Work Package Pages

Page No.	Chg. No.	Page No.	Chg. No.	Page No.	Chg. No.
1 thru 15	0	16(Blank)	0		

Record of Applicable Technical Directives

None

TABLE OF CONTENTS

Para.	Title	Page
1.	INTRODUCTION	3
1.1	Purpose	3
1.2	Scope	3
1.3	Applicability	3
1.4	Reference Documents	3
2.	PRECAUTIONS AND LIMITATIONS	4
3.	PREREQUISITE ACTIONS	4
4.	NORMAL STARTUP OPERATION OF MCC-5A	5
4.1	Startup Preparations	5
4.2	Switching Operations	5
4.3	Monitoring	6
5.	NORMAL SHUTDOWN OPERATION OF MCC-5A	7
5.1	Shutdown Preparations	7
5.2	Switching Operations	7
5.3	Verification	7
6.	ISOLATION PROCEDURE OF MCC-5A	8
6.1	Coordination of Operations	8
6.2	Switching Operations	8
6.3	Securing the Equipment	10
7.	AUTOMATIC SHUTDOWN OF MCC-5A	10
7.1	Shutdown Investigation	11
7.2	Switching and Isolation Operations	11
8.	RECORDS	12
Appendix A	MCC-5A One-Line Diagram	13
Appendix B	MCC-5A Front Elevation	14
Appendix C	Electrical Loads Associated with MCC-5A	15

1. INTRODUCTION.

Motor Control Center No. 5A (MCC-5A) is located outdoors in a NEMA type 3R rainproof enclosure west of permanent facility building no. 702. MCC-5A is a 480-volt, three-phase, three-wire system with a 600-ampere bus, 600-ampere frame main breaker with a 600-ampere trip. MCC-5A is fed from 5KV MCC-B (compartment 6FA), via step-down transformer TX-5. MCC-5A is used to distribute 480-volt, three-phase power to the permanent facility building and other 480-volt loads in the area. See Appendixes A, B, and C.

TX-5 is located outdoors by MCC-5A. TX-5 is a 4160-480V, delta-wye, 750KVA, step-down transformer with a fused 600-ampere load break disconnect switch on the primary side.

1.1 **Purpose.** This procedure provides step-by-step operations which shall be performed to safely and efficiently operate MCC-5A.

1.2 **Scope.** This procedure provides directions to an authorized electrician for the performance of the following activities under normal conditions:

A. Start up MCC-5A and TX-5.

B. Shut down MCC-5A.

C. Isolate MCC-5A and TX-5.

D. Investigate an automatic shutdown of MCC-5A.

1.3 **Applicability.** The activities described in this procedure shall be performed by an authorized electrician at the request of the supervisor.

1.4 **Reference Documents.**

A. Block Diagram Power Distribution, drawing SJ-E-302-018.

B. One-Line Diagram 5KV MCC-A & MCC-B, drawing SJ-E-302-056.

C. One-Line Diagram 480V MCC-5, 5E, 6, & 5A, drawing SJ-E-302-061.

D. Work package 013 00, 5KV Motor Control Center MCC-B.

E. Work package 014 00, 480V Motor Control Center MCC-5.

2. **PRECAUTIONS AND LIMITATIONS.**

The following precautions and limitations apply to the operation of MCC-5A and TX-5:

A. All nonessential personnel shall maintain a minimum distance of 10 feet from MCC-5A and TX-5 when power is first applied, until startup is complete.

B. Use of insulating gloves, protective body gowns, hooded face shields, and insulating floor mats are required during 5KV racking and switching operations.

C. A safety watch shall be stationed within view of the electrician performing 5KV switching operations.

D. The power source for MCC-5A is MCC-B via TX-5. The nominal phase-to-phase voltage from MCC-B is 4160 volts (4000V minimum) and 480 volts (460V to 510V acceptable) from TX-5.

E. If rain is imminent or is falling, the doors to the MCC-5A and TX-5 enclosures shall remain closed to prevent water entry.

3. **PREREQUISITE ACTIONS.**

The following prerequisite actions shall be accomplished prior to the operation of MCC-5A and TX-5:

A. Review the job safety analysis (JSA), if applicable, on this equipment for potential safety hazards and review associated one-line diagrams with the supervisor.

B. The supervisor shall verify that routine preventive maintenance has been performed on MCC-5A, TX-5, and their components as described in the applicable maintenance requirement card (MRC).

C. The operations shift supervisor shall ensure all clearance orders (Safe Work Permits) associated with MCC-5A have been issued.

D. Visually inspect MCC-5A, TX-5, and MCC-B (compartment 6FA) for any evidence of moisture, rodents, or other signs of damage. Report same to supervisor.

E. Visually check for any temporary wiring, grounds, locks, or tags. All findings shall be reported to the control room operator and the supervisor.

F. Site operations personnel shall verify equipment status and install or remove locks and tags as necessary.

4. NORMAL STARTUP OPERATION OF MCC-5A.

A normal startup operation is performed when 480V power is applied to MCC-5A from MCC-B via TX-5. The following steps shall be executed to complete MCC-5A startup.

4.1 Startup Preparations.

[1] Obtain an electrical switching order (ESO) from the supervisor.

[2] Clear the area around MCC-5A and TX-5 of all nonessential personnel until startup is complete.

[3] At MCC-5A, verify that all circuit breakers are in the OFF position.

[4] At TX-5, verify that the load break disconnect switch is in the CLOSED position.

[5] At MCC-B (compartment 4FA), using the panel-mounted voltmeter, verify that phase-to-phase bus voltages are nominally 4160 volts. Report any phase-to-phase readings less than 4000 volts to the supervisor.

4.2 Switching Operations.

[1] Notify the control room operator that MCC-5A and TX-5 are being energized.

WARNING 1

Closing the TX-5 feeder contactor at MCC-B (compartment 6FA) will supply 480V power to the primary side of the MCC-5 main breaker.

WARNING 2

An electrical fault and flash could cause injury or death to personnel. Use of insulating gloves, protective body gowns, hooded face shields, and insulating floor mats are required during 5KV racking and switching operations.

[2] At MCC-B (compartment 6FA), close the TX-5 feeder contactor as follows:

[a] While standing on an insulating floor mat and to the hinged side of the compartment, depress the disconnect switch release mechanism and rotate the disconnect switch handle to the ON position.

[b] Press the red CLOSE button.

[c] Verify that the red CLOSE indicating light is on.

[3] At MCC-5A (compartment 2FA), using the panel-mounted voltmeter, verify that phase-to-phase voltages are nominally 480 volts (460V to 510V acceptable).

NOTE
TX-5 is now energized.

[4] Notify the control room operator that TX-5 is now energized.

[5] At MCC-5A (compartment 2FD), turn the handle of the MCC-5A main breaker to the ON position.

4.3 Monitoring.

[1] At MCC-5A (compartment 2FA), using the panel-mounted voltmeter, verify that phase-to-phase bus voltages are nominally 480 volts (460V to 510V acceptable).

[2] Using the panel-mounted ammeter, verify that there is no load on MCC-5A.

NOTE
MCC-5A is now energized and available for startup of other 480V equipment.

[3] Notify the control room operator that MCC-5A is now energized.

5. NORMAL SHUTDOWN OPERATION OF MCC-5A.

A normal shutdown operation is performed when 480V power is removed from MCC-5A. The following steps shall be executed to complete MCC-5A shutdown.

NOTE
TX-5 will remain energized.

5.1 Shutdown Preparations.

[1] Obtain an electrical switching order (ESO) from the supervisor.

[2] Clear the area around MCC-5A of all nonessential personnel until shutdown is complete.

[3] At MCC-5A, verify that all branch circuits are de-energized by visually checking the position of all branch circuit breakers. Notify the supervisor of any remaining energized circuits.

5.2 Switching Operations.

[1] Notify the control room operator that MCC-5A is being de-energized.

[2] At MCC-5A (compartment 2FA), using the panel-mounted ammeter, verify that there is no load on MCC-5A.

[3] At compartment 2FD, turn the handle of the MCC-5A main breaker to the OFF position.

5.3 Verification.

[1] At MCC-5A (compartment 2FA), using the panel-mounted ammeter, verify that there is no load on MCC-5A.

NOTE
MCC-5A is now de-energized.

[2] Notify the control room operator that MCC-5A is now de-energized.

6. ISOLATION PROCEDURE OF MCC-5A.

Isolation of MCC-5A and TX-5 will prevent normal startup operation of MCC-5A and TX-5. The following steps shall be executed only after MCC-5A shutdown operation (paragraph 5 above) is complete.

6.1 Coordination of Operations.

[1] Obtain an electrical switching order (ESO) from the supervisor.

[2] Notify the control room operator that MCC-5A and TX-5 are being isolated.

6.2 Switching Operations.

[1] Shut down MCC-5 per work package 014 00.

[2] At MCC-B (compartment 6FA), using the panel-mounted ammeter, verify that there is no load on the TX-5 feeder contactor.

WARNING

An electrical fault and flash could cause injury or death to personnel. Use of insulating gloves, protective body gowns, hooded face shields, and insulating floor mats are required during 5KV switching operations.

[3] Trip the TX-5 feeder contactor by pushing the green TRIP button.

NOTE

If the TRIP button does not open the TX-5 feeder contactor, manually open the contactor by pulling the manual trip knob.

[4] Verify that the green OPEN and amber LOSS OF PHASE indicating lights are on and the red CLOSE indicating light is off.

WARNING

An electrical fault and flash could cause injury or death to personnel. Use of insulating gloves, protective body gowns, hooded face shields, and insulating floor mats are required when racking out 5KV contactors.

[5] Rack out the TX-5 feeder contactor as follows:

[a] While standing on an insulating floor mat and to the hinged side of the compartment, depress the disconnect switch release mechanism and rotate the disconnect switch handle to the OFF position.

[b] Verify that the red CLOSE, green OPEN, and amber LOSS OF PHASE indicating lights are off.

NOTE

Control power from LP-1 (MCC-1A compartment 6FC) is still present for the space heater and blue indicating light.

[6] At MCC-5A (compartment 2FA), using the panel-mounted voltmeter, verify that phase-to-phase voltages are zero.

[7] At TX-5, rotate the load break disconnect switch to the OPEN position.

[8] Verify that the TX-5 load break disconnect switch indicator shows DIS SWT OPEN.

NOTE

MCC-5A and TX-5 are now isolated.

[9] Notify the control room operator that MCC-5A and TX-5 are now isolated.

6.3 Securing the Equipment.

WARNING

Failure to lock out the TX-5 feeder contactor at MCC-B (compartment 6FA), the MCC-5A main breaker at MCC-5A, and the load break disconnect switch at TX-5 will create a potential hazard for personnel performing maintenance on MCC-5A and TX-5.

[1] At MCC-B (compartment 6FA), attach a lock and tag to the disconnect switch release mechanism of the OFF disconnect switch.

[2] At MCC-5A (compartment 2FD), attach a lock and tag to the handle of the OFF MCC-5A main breaker.

[3] AT TX-5, attach a lock and tag to the handle of the load break disconnect switch.

[4] Log all locks and tags installed as part of the isolation procedure.

NOTE 1

MCC-5A and TX-5 are now secured for maintenance.

NOTE 2

The number of each lock and tag as well as the name of the person who installed them shall be entered in the lockout/tagout log.

NOTE 3

A clearance order (Safe Work Permit) shall be obtained from the operations shift supervisor prior to start of work.

[5] Notify the control room operator that MCC-5A and TX-5 are now secured for maintenance.

7. AUTOMATIC SHUTDOWN OF MCC-5A.

An automatic shutdown of MCC-5A occurs when protective devices detect an abnormal condition and trip open the TX-5 feeder contactor, the MCC-5A main breaker, or the fuses for the TX-5 load break disconnect switch are blown open. In the event of an automatic shutdown, the following steps shall be executed to assist maintenance personnel in determining the cause of the shutdown.

7.1 Shutdown Investigation.

[1] Notify the control room operator that MCC-5A has automatically shutdown and is being investigated.

WARNING

Due to the unknown nature or exact location of the condition which caused the automatic shutdown, all nonessential personnel shall stay clear of power distribution equipment associated with MCC-5A and TX-5.

[2] Clear the area around MCC-5A and TX-5 of all nonessential personnel until isolation procedure is complete.

[3] Inspect the exterior of MCC-5A, TX-5, and MCC-B (compartment 6FA) for any signs of damage or conditions which may affect the system operation.

[4] At MCC-5A, record the status of the following items:

[a] Main breaker - on, trip, or off.

[b] Phase-to-phase voltages on the panel-mounted voltmeter.

[c] All branch circuit breakers that have tripped.

[d] Ammeter readings for all phases.

[5] At MCC-B (compartment 6FA), record the status of the following items:

[a] Red, green, amber, and blue indicating lights - on or off.

[b] Ammeter readings for all phases.

[c] Loss of phase relay 46 - tripped or reset.

[6] At TX-5, record the status of the fuses for the load break disconnect switch.

7.2 Switching and Isolation Operations.

[1] If the MCC-5A main breaker and TX-5 feeder contactor have both tripped open, then isolate per paragraph 6 above.

[2] If only the MCC-5A main breaker has tripped open, then isolate as follows:

[a] Turn the handle of the MCC-5A main breaker to the OFF position.

[b] Attach a lock and tag to the handle of the MCC-5A main breaker.

[c] Enter the lock and tag into the lockout/tagout log.

[3] If the MCC-5A main breaker is still closed, but the TX-5 feeder contactor at MCC-B has tripped open, then isolate per paragraph 6 above.

[4] If the fuses for the TX-5 load break disconnect switch have blown open, then isolate per paragraph 6 above.

[5] Report all findings and actions taken to the supervisor.

8. RECORDS.

A. Any locks or tags attached to or removed from MCC-5A, the TX-5 load break disconnect switch, or MCC-B shall be entered in the lockout/tagout log.

B. Any findings of abnormal conditions shall be noted and reported to the control room operator, the supervisor, and the maintenance manager. A work request shall be initiated to correct the problem.

APPENDIX A

MCC-5A ONE-LINE DIAGRAM

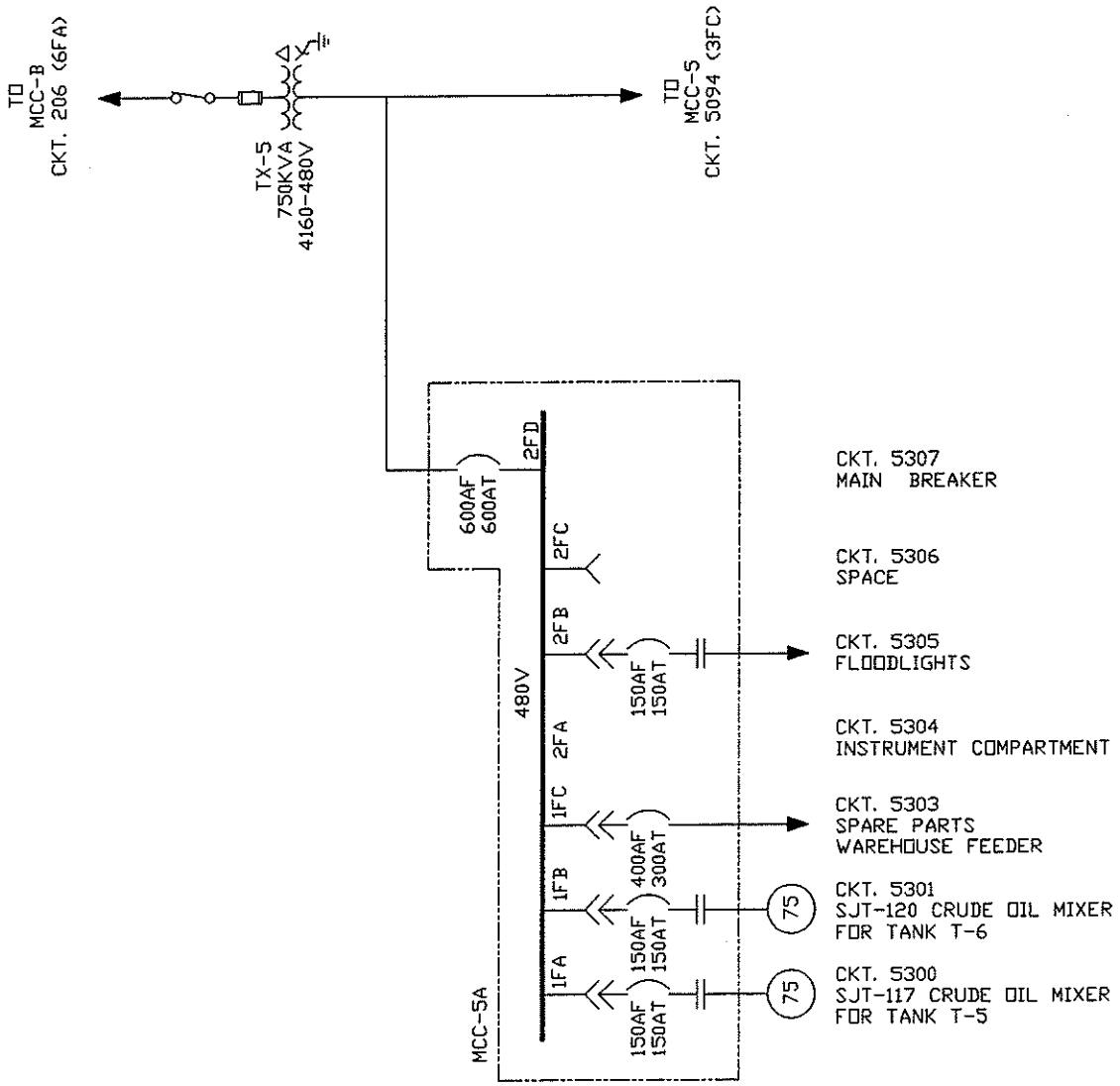

APPENDIX B

MCC-5A FRONT ELEVATION

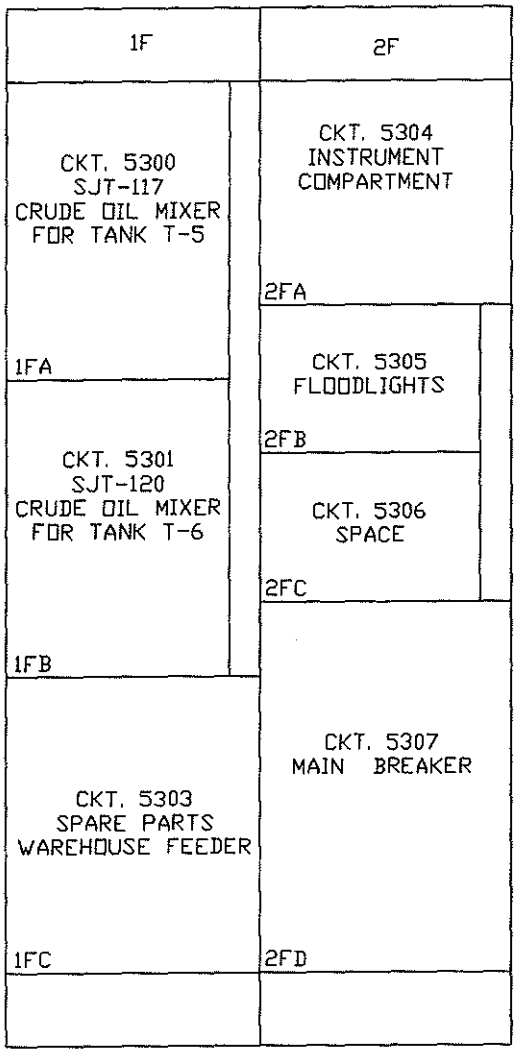

APPENDIX C

ELECTRICAL LOADS ASSOCIATED WITH MCC-5A

The following list of electrical loads are fed from MCC-5A and will be affected by normal shutdown or automatic shutdown of MCC-5A:

SJT-117 Crude oil mixer for tank T-5.
SJT-120 Crude oil mixer for tank T-6.
Spare parts warehouse.
Floodlights.

NORMAL OPERATING PROCEDURE

SAINT JAMES SITE

5KV SWITCHGEAR DOCK NO. 1

NORMAL OPERATING PROCEDURE

SAINT JAMES SITE

5KV SWITCHGEAR DOCK NO. 1

List of Effective Work Package Pages

Page No.	Chg. No.	Page No.	Chg. No.	Page No.	Chg. No.
1 thru 24	0				

Record of Applicable Technical Directives

None

TABLE OF CONTENTS

Para.	Title	Page
1.	INTRODUCTION	3
1.1	Purpose	3
1.2	Scope	3
1.3	Applicability	3
1.4	Reference Documents	3
2.	PRECAUTIONS AND LIMITATIONS	4
3.	PREREQUISITE ACTIONS	4
4.	NORMAL STARTUP OPERATION OF DOCK NO. 1 SWITCHGEAR	5
4.1	Startup Preparations	5
4.2	Switching Operations	5
4.3	Monitoring	6
5.	NORMAL STARTUP OPERATION OF THE MOTOR CONTROLLERS FOR FIRE WATER PUMPS SJTP-1 AND SJTP-3	6
5.1	Startup Preparations	6
5.2	Switching Operations	6
6.	EMERGENCY STARTUP OPERATION OF FIRE WATER PUMPS SJTP-1 AND SJTP-3	9
6.1	Startup Preparations	9
6.2	Switching Operations	9
7.	NORMAL SHUTDOWN OPERATION OF THE MOTOR CONTROLLERS FOR FIRE WATER PUMPS SJTP-1 AND SJTP-3	11
7.1	Shutdown Preparations	11
7.2	Switching Operations	12
8.	ISOLATION PROCEDURE OF THE MOTOR CONTROLLERS FOR FIRE WATER PUMPS SJTP-1 AND SJTP-3	14
8.1	Coordination of Operations	14
8.2	Switching Operations	14
8.3	Securing the Equipment	15
9.	NORMAL SHUTDOWN OPERATION OF DOCK NO. 1 SWITCHGEAR	16
9.1	Shutdown Preparations	16
9.2	Switching Operations	16
9.3	Verification	17
10.	ISOLATION PROCEDURE OF DOCK NO. 1 SWITCHGEAR	17
10.1	Coordination of Operations	17
10.2	Switching Operations	18
10.3	Securing the Equipment	18
11.	AUTOMATIC SHUTDOWN OF DOCK NO. 1 SWITCHGEAR	19
11.1	Shutdown Investigation	19
11.2	Switching and Isolation Operations	20
12.	RECORDS	20
Appendix A	5KV Switchgear Dock No. 1 One-Line Diagram	21
Appendix B	5KV Switchgear Dock No. 1 Front Elevation	22
Appendix C	Motor Controllers for Fire Water Pumps SJTP-1 and SJTP-3 Front Elevation	23
Appendix D	Electrical Loads Associated with 5KV Switchgear Dock No. 1	24

1. **INTRODUCTION.**

The dock no. 1 switchgear is located in the DOE substation yard across highway 18 from dock no. 1. Dock no. 1 switchgear is a 4160-volt, three-phase, three-wire system with a 1200-ampere bus. Dock no. 1 switchgear is fed from three LP&L 500KVA pole-mounted transformers with fused disconnects on the primary side. Dock no. 1 switchgear is used to feed 480V MCC-D1 via step-down transformer SJXFMR-7 through an automatic transfer switch SJATS-2, 200HP fire water pump SJTP-1, and 1000HP fire water pump SJTP-3. See Appendixes A, B, and C.

1.1 **Purpose.** This procedure provides step-by-step operations which shall be performed to safely and efficiently operate dock no. 1 switchgear.

1.2 **Scope.** This procedure provides directions to an authorized electrician for the performance of the following activities under normal conditions:

A. Start up dock no. 1 switchgear.

B. Start up the motor controllers for fire water pumps SJTP-1 and SJTP-3.

C. Emergency start up of fire water pumps SJTP-1 and SJTP-3.

D. Shut down the motor controllers for fire water pumps SJTP-1 and SJTP-3.

E. Isolate the motor controllers for fire water pumps SJTP-1 and SJTP-3.

F. Shut down dock no. 1 switchgear.

G. Isolate dock no. 1 switchgear.

H. Investigate an automatic shutdown of dock no. 1 switchgear.

1.3 **Applicability.** The activities described in this procedure shall be performed by an authorized electrician at the request of the supervisor.

1.4 **Reference Documents.**

A. One-Line Diagram Dock No. 1, drawing SJ-E-302-064.

B. Work package 026 00, 480V Motor Control Center MCC-D1.

2. PRECAUTIONS AND LIMITATIONS.

The following precautions and limitations apply to the operation of dock no. 1 switchgear:

A. All nonessential personnel shall maintain a minimum distance of 10 feet from dock no. 1 switchgear when power is first applied, until startup is complete.

B. Use of insulating gloves, protective body gowns, hooded face shields, and insulating floor mats are required during 5KV racking or switching operations.

C. A safety watch shall be stationed within view of the electrician performing 5KV racking operations.

D. The power source for dock no. 1 switchgear is the LP&L transformers. The nominal phase-to-phase voltage from this source is 4160 volts (4000 volts minimum).

3. PREREQUISITE ACTIONS.

The following prerequisite actions shall be accomplished prior to the operation of dock no. 1 switchgear:

A. Review the job safety analysis (JSA), if applicable, on this equipment for potential safety hazards and review associated one-line diagrams with the supervisor.

B. The supervisor shall verify that routine preventive maintenance has been performed on dock no. 1 switchgear and its components as described in the applicable maintenance requirement card (MRC).

C. The operations shift supervisor shall ensure all clearance orders (Safe Work Permits) associated with dock no. 1 switchgear have been issued.

D. Visually inspect dock no. 1 switchgear for any evidence of moisture, rodents, or other signs of damage. Report same to supervisor.

E. Visually check for any temporary wiring, grounds, locks or tags. All findings shall be reported to the control room operator and the supervisor.

F. Site operations personnel shall verify equipment status and install or remove locks and tags as necessary.

4. NORMAL STARTUP OPERATION OF DOCK NO. 1 SWITCHGEAR.

A normal startup operation is performed when 4160V power is applied to dock no. 1 switchgear from LP&L pole-mounted transformers. The following steps shall be executed to complete dock no. 1 switchgear startup.

4.1 Startup Preparations.

[1] Obtain an electrical switching order (ESO) from the supervisor.

[2] Clear the area around dock no. 1 switchgear of all nonessential personnel until startup is complete.

[3] At dock no. 1 switchgear (compartment 1FA), verify that the LBDS-1 disconnect switch for SJXFMR-7 is in the OPEN position.

[4] At compartment 2FA, verify that the disconnect switch for fire water pump SJTP-1 is in the OPEN position.

[5] At compartment 4FA, verify that the disconnect switch for fire water pump SJTP-3 is in the OPEN position.

4.2 Switching Operations.

[1] Notify the control room operator that dock no. 1 switchgear is being energized.

[2] At dock no. 1 switchgear, remove the temporary ground cables connected from the overhead incoming feed to the grounding system for dock no. 1 switchgear.

NOTE

LP&L owns the substation that feeds dock no. 1 switchgear and is responsible for switching operations of the overhead fused disconnect switches.

[3] Verify that the jumpers between the incoming line and the overhead fused disconnect switches have been reconnected.

[4] Verify that both sets of the overhead fused disconnect switches are closed.

4.3 Monitoring.

[1] At dock no. 1 switchgear (compartment 3FA), using the panel-mounted voltmeter, verify that incoming bus voltages for dock no. 1 switchgear are nominally 4160 volts.

NOTE

Dock no. 1 switchgear is now energized and available for startup of other 5KV electrical equipment.

[2] Notify the control room operator that dock no. 1 switchgear is now energized.

5. NORMAL STARTUP OPERATION OF THE MOTOR CONTROLLERS FOR FIRE WATER PUMPS SJTP-1 AND SJTP-3.

A normal startup operation is performed when 4160V power is applied to the motor controllers for fire water pumps SJTP-1 and SJTP-3. The following steps shall be executed to complete startup of the motor controllers for fire water pumps SJTP-1 and SJTP-3.

5.1 Startup Preparations.

[1] Obtain an electrical switching order (ESO) from the supervisor.

[2] At dock no. 1 switchgear (compartment 3FA), using the panel-mounted voltmeter, verify that phase-to-phase bus voltages are nominally 4160 volts.

[3] Clear the area around dock no. 1 switchgear, motor controller P-1, and motor controller P-3 of all nonessential personnel until startup is complete.

5.2 Switching Operations.

[1] Energize the motor controller for fire water pump SJTP-1 as follows:

[a] Notify the control room operator that the motor controller for fire water pump SJTP-1 is being energized.

WARNING

An electrical fault and flash could cause injury or death to personnel. Use of insulating gloves, protective body gowns, hooded face shields, and insulating floor mats are required during 5KV racking operations.

[b] At dock no. 1 switchgear (compartment 2FA), while standing on an insulating floor mat and to the hinged side of the compartment, rotate the P-1 FEEDER disconnect switch to the CLOSE position.

NOTE

Motor controller P-1 is located in dock no. 1 fire pump building no. 720.

[c] At motor controller P-1, verify that the pressure gauge reads above 110 psig.

WARNING

An electrical fault and flash could cause injury or death to personnel. Use of insulating gloves, protective body gowns, hooded face shields, and insulating floor mats are required when racking in 5KV motor controllers.

[d] At motor controller P-1, while standing on an insulating floor mat and to the hinged side of the controller, depress the disconnect switch release mechanism and rotate the disconnect switch handle to the ON position.

[e] Using the panel-mounted voltmeter, verify that the voltage is nominally 4160 volts. Report any readings less than 4000 volts to the supervisor.

[f] Verify that the yellow POWER AVAILABLE indicating light is on.

NOTE

The motor controller for fire water pump SJTP-1 is now energized.

[g] Notify the control room operator that the motor controller for fire water pump SJTP-1 is now energized.

[2] Energize the motor controller for fire water pump SJTP-3 as follows:

[a] Notify the control room operator that the motor controller for fire water pump SJTP-3 is being energized.

WARNING

An electrical fault and flash could cause injury or death to personnel. Use of insulating gloves, protective body gowns, hooded face shields, and an insulating floor mats are required during 5KV racking operations.

[b] At dock no. 1 switchgear (compartment 4FA), while standing on an insulating floor mat and to the hinged side of the compartment, rotate the P-3 FEEDER disconnect switch to the CLOSE position.

NOTE

Motor controller P-3 is located in dock no. 1 fire pump building no. 720.

[c] At motor controller P-3, verify that the pressure gauge reads above 100 psig.

WARNING

An electrical fault and flash could cause injury or death to personnel. Use of insulating gloves, protective body gowns, hooded face shields, and insulating floor mats are required when racking in 5KV motor controllers.

[d] At motor controller P-3, while standing on an insulating floor mat and to the hinged side of the controller, depress the disconnect switch release mechanism and rotate the disconnect switch handle to the ON position.

[e] Using the panel-mounted voltmeter, verify that the voltage is nominally 4160 volts. Report any readings less than 4000 volts to the supervisor.

[f] Verify that the yellow POWER AVAILABLE indicating light is on.

NOTE

The motor controller for fire water pump SJTP-3 is now energized.

[g] Notify the control room operator that the motor controller for fire water pump SJTP-3 is now energized.

6. EMERGENCY STARTUP OPERATION OF FIRE WATER PUMPS SJTP-1 AND SJTP-3.

An emergency startup operation of the fire water pumps SJTP-1 and SJTP-3 shall be performed when the control room operator has determined that the following conditions have been met:

A. The site main fire water system could not maintain pressure.

B. The electric fire water pumps SJTP-1 and SJTP-3 did not start automatically.

C. The dock diesel fire water pumps SJTP-2 and SJTP-4 did not start automatically.

D. The dock diesel fire water pumps SJTP-2 and SJTP-4 did not start manually.

The following steps shall be executed only after startup operation of the motor controllers for fire water pumps SJTP-1 and SJTP-3 (paragraph 5 above) are complete.

6.1 Startup Preparations.

[1] Obtain an electrical switching order (ESO) from the supervisor.

[2] At dock no. 1 switchgear (compartment 3FA), using the panel-mounted voltmeter, verify that phase-to-phase bus voltages are nominally 4160 volts.

[3] Clear the area around dock no. 1 switchgear, motor controller P-1, and motor controller P-3 of all nonessential personnel until startup is complete.

6.2 Switching Operations.

[1] Energize fire water pump SJTP-1 as follows:

[a] Notify the control room operator that fire water pump SJTP-1 is being energized.

[b] At dock no. 1 switchgear (compartment 2FA), verify that the P-1 FEEDER disconnect switch is in the CLOSED position.

NOTE

Motor controller P-1 is located in dock no. 1 fire pump building no. 720.

[c] At motor controller P-1, verify that the disconnect switch handle is in the ON position.

[d] Using the panel-mounted voltmeter, verify that the voltage is nominally 4160 volts. Report any readings less than 4000 volts to the supervisor.

[e] Verify that the yellow POWER AVAILABLE indicating light is on.

WARNING

An electrical fault and flash could cause injury or death to personnel. Use of insulating gloves, protective body gowns, hooded face shields, and insulating floor mats are required during 5KV switching operations.

[f] Push the green START button.

NOTE 1

If the START button does not start the fire water pump, manually start the fire water pump by pulling the MANUAL CLOSE knob.

NOTE 2

Fire water pump SJTP-1 is now energized.

[g] Notify the control room operator that fire water pump SJTP-1 is now energized.

[2] Energize fire water pump SJTP-3 as follows:

[a] Notify the control room operator that fire water pump SJTP-3 is being energized.

[b] At dock no. 1 switchgear (compartment 2FA), verify that the P-3 FEEDER disconnect switch is in the CLOSE position.

NOTE

Motor controller P-3 is located in dock no. 1 fire pump building no. 720.

[c] At motor controller P-3, verify that the disconnect switch handle is in the ON position.

[d] Using the panel-mounted voltmeter, verify that the voltage is nominally 4160 volts. Report any readings less than 4000 volts to the supervisor.

[e] Verify that the yellow POWER AVAILABLE indicating light is on.

WARNING

An electrical fault and flash could cause injury or death to personnel. Use of insulating gloves, protective body gowns, hooded face shields, and insulating floor mats are required during 5KV switching operations.

[f] Push the green START button.

NOTE 1

If the START button does not start the fire water pump, manually start the fire water pump by pulling the MANUAL CLOSE knob.

NOTE 2

Fire water pump SJTP-3 is now energized.

[g] Notify the control room operator that fire water pump SJTP-3 is now energized.

7. NORMAL SHUTDOWN OPERATION OF THE MOTOR CONTROLLERS FOR FIRE WATER PUMPS SJTP-1 AND SJTP-3.

A normal shutdown operation is performed when 4160V power is removed from the motor controllers for fire water pumps SJTP-1 and SJTP-3. The following steps shall be executed to complete shutdown of the motor controllers for fire water pumps SJTP-1 and SJTP-3.

7.1 Shutdown Preparations.

[1] Obtain an electrical switching order (ESO) from the supervisor.

[2] Clear the area around dock no. 1 switchgear, motor controller P-1, and motor controller P-3 of all nonessential personnel until shutdown is complete.

7.2 Switching Operations.

[1] De-energize the motor controller for fire water pump SJTP-1 as follows:

[a] Notify the control room operator that the motor controller for fire water pump SJTP-1 is being de-energized.

NOTE

Motor controller P-1 is located in dock no. 1 fire pump building no. 720.

[b] At motor controller P-1, using the panel-mounted ammeter, verify that there is no load on 5KV motor controller P-1.

WARNING

An electrical fault and flash could cause injury or death to personnel. Use of insulating gloves, protective body gowns, hooded face shields, and insulating floor mats are required when racking out 5KV motor controllers.

[c] At motor controller P-1, while standing on an insulating floor mat and to the hinged side of the controller, depress the disconnect switch release mechanism and rotate the disconnect switch handle to the OFF position.

[d] Using the panel-mounted voltmeter, verify that voltage is zero.

[e] Verify that the yellow POWER AVAILABLE indicating light is off.

WARNING

An electrical fault and flash could cause injury or death to personnel. Use of insulating gloves, protective body gowns, hooded face shields, and insulating floor mats are required during 5KV racking operations.

[f] At dock no. 1 switchgear (compartment 2FA), while standing on an insulating floor mat and to the hinged side of the compartment, rotate the P-1 FEEDER disconnect switch to the OPEN position.

[g] Notify the control room operator that the motor controller for fire water pump SJTP-1 is now de-energized.

[2] De-energize the motor controller for fire water pump SJTP-3 as follows:

[a] Notify the control room operator that the motor controller for fire water pump SJTP-3 is being de-energized.

NOTE

Motor controller P-3 is located in dock no. 1 fire pump building no. 720.

[b] At motor controller P-3, using the panel-mounted ammeter, verify that there is no load on 5KV motor controller P-3.

WARNING

An electrical fault and flash could cause injury or death to personnel. Use of insulating gloves, protective body gowns, hooded face shields, and insulating floor mats are required when racking out 5KV motor controllers.

[c] At motor controller P-3, while standing on an insulating floor mat and to the hinged side of the controller, depress the disconnect switch release mechanism and rotate the disconnect switch handle to the OFF position.

[d] Using the panel-mounted voltmeter, verify that voltage is zero.

[e] Verify that the yellow POWER AVAILABLE indicating light is off.

WARNING

An electrical fault and flash could cause injury or death to personnel. Use of insulating gloves, protective body gowns, hooded face shields, and insulating floor mats are required during 5KV racking operations.

[f] At dock no. 1 switchgear (compartment 4FA), while standing on an insulating floor mat and to the hinged side of the compartment, rotate the P-3 FEEDER disconnect switch to the OPEN position.

[g] Notify the control room operator that the motor controller for fire water pump SJTP-3 is now de-energized.

8. ISOLATION PROCEDURE OF THE MOTOR CONTROLLERS FOR FIRE WATER PUMPS SJTP-1 AND SJTP-3.

Isolation of the motor controllers for fire water pumps SJTP-1 and SJTP-3 will prevent normal startup operation of the motor controllers for fire water pumps SJTP-1 and SJTP-3. The following steps shall be executed only after shutdown operations of the motor controllers for fire water pumps SJTP-1 and SJTP-3 (paragraph 7 above) are complete.

8.1 Coordination of Operations.

[1] Obtain an electrical switching order (ESO) from the supervisor.

[2] Notify the control room operator that the motor controllers for fire water pumps SJTP-1 and SJTP-3 are being isolated.

8.2 Switching Operations.

[1] Isolate the motor controller for fire water pump SJTP-1 as follows:

[a] At motor controller P-1, verify that the disconnect switch is in the OFF position.

[b] At dock no. 1 switchgear (compartment 2FA), verify that the P-1 FEEDER disconnect switch is in the OFF position.

NOTE
The motor controller for fire water pump SJTP-1 is now isolated.

[c] Notify the control room operator that the motor controller for fire water pump SJTP-1 is now isolated.

[2] Isolate the motor controller for fire water pump SJTP-3 as follows:

[a] At motor controller P-3, verify that the disconnect switch is in the OFF position.

[b] At dock no. 1 switchgear (compartment 4FA), verify that the P-3 FEEDER disconnect switch is in the OFF position.

NOTE

The motor controller for fire water pump SJTP-3 is now isolated.

[c] Notify the control room operator that the motor controller for fire water pump SJTP-3 is now isolated.

8.3 Securing the Equipment.

WARNING

Failure to lock out the motor controllers for fire water pumps SJTP-1 and SJTP-3 and the P-1 FEEDER and P-3 FEEDER disconnect switches will create a potential hazard for personnel performing maintenance.

[1] Secure the motor controller for fire water pump SJTP-1 as follows:

[a] At motor controller P-1, attach a lock and tag to the disconnect switch release mechanism of the OFF disconnect switch.

[b] At dock no. 1 switchgear (compartment 2FA), attach a lock and tag to the OPEN P-1 FEEDER disconnect switch.

[2] Secure the motor controller for fire water pump SJTP-3 as follows:

[a] At motor controller P-3, attach a lock and tag to the disconnect switch release mechanism of the OFF disconnect switch.

[b] At dock no. 1 switchgear (compartment 4FA), attach a lock and tag to the OPEN P-3 FEEDER disconnect switch.

[3] Log all locks and tags installed as part of this isolation procedure.

NOTE 1

Fire water pumps SJTP-1 and SJTP-3 are now secured for maintenance.

NOTE 2

The number of each lock and tag as well as the name of the person who installed them shall be entered in the lockout/tagout log.

NOTE 3

A clearance order (Safe Work Permit) shall be obtained from the operations shift supervisor prior to start of work.

[4] Notify the control room operator that fire water pumps SJTP-1 and SJTP-3 are now secured for maintenance.

9. NORMAL SHUTDOWN OPERATION OF DOCK NO. 1 SWITCHGEAR.

A normal shutdown operation is performed when 4160V power is removed from dock no. 1 switchgear. The following steps shall be executed to complete dock no. 1 switchgear shutdown.

9.1 Shutdown Preparations.

[1] Obtain an electrical switching order (ESO) from the supervisor.

[2] Clear the area around dock no. 1 switchgear of all nonessential personnel until shutdown is complete.

[3] At dock no. 1 switchgear (compartment 2FA), verify that P-1 FEEDER disconnect switch is in the OPEN position.

[4] At compartment 4FA, verify that P-3 FEEDER disconnect switch is in the OPEN position.

9.2 Switching Operations.

[1] Notify the control room operator that dock no. 1 switchgear is being de-energized.

NOTE

When SJXFMR-7 is de-energized, MCC-D1 will be fed from emergency generator LPG-1.

[2] De-energize SJXFMR-7 as follows:

[a] Notify the control room operator that SJXFMR-7 is being de-energized.

WARNING

An electrical fault and flash could cause injury or death to personnel. Use of insulating gloves, protective body gowns, hooded face shields, and an insulating floor mats are required during 5KV racking operations.

[b] At compartment 1FA, rotate the LBDS-1 disconnect switch to the OPEN position.

[c] Using the panel-mounted ammeter, verify that there is no load on the LBDS-1 disconnect switch.

[d] Notify the control room operator that SJXFMR-7 is now de-energized.

NOTE

LP&L owns the substation that feeds dock no. 1 switchgear and is responsible for switching operations of the overhead fused disconnect switches.

[3] Verify that the overhead fused disconnect switches are open.

9.3 Verification.

[1] At dock no. 1 switchgear (compartment 3FA), using the panel-mounted voltmeter, verify that incoming bus voltages for dock no. 1 switchgear are zero.

NOTE

Dock no. 1 switchgear is now de-energized.

[2] Notify the control room operator that dock no. 1 switchgear is de-energized.

10. ISOLATION PROCEDURE OF DOCK NO. 1 SWITCHGEAR.

Isolation of dock no. 1 switchgear will prevent normal startup operation of dock no. 1 switchgear. The following steps shall be executed only after dock no. 1 switchgear shutdown operation (paragraph 9 above) is complete.

10.1 Coordination of Operations.

[1] Obtain an electrical switching order (ESO) from the supervisor.

[2] Notify the control room operator that dock no. 1 switchgear is being isolated.

10.2 Switching Operations.

NOTE

LP&L owns the substation that feeds dock no. 1 switchgear and is responsible for switching operations of the overhead fused disconnect switches.

[1] Verify that both sets of the overhead fused disconnect switches are open.

[2] Verify that the jumpers between the fused disconnect switches and the incoming line have been disconnected.

NOTE

Dock no. 1 switchgear is now isolated.

[3] Notify the control room operator that dock no. 1 switchgear is now isolated.

10.3 Securing the Equipment.

WARNING

Because dock no. 1 switchgear is unable to be locked out, temporary ground cables must be installed.

[1] Attach temporary ground cables from the overhead incoming feed to the grounding system for dock no. 1 switchgear.

NOTE 1

Dock no. 1 switchgear is now secured for maintenance.

NOTE 2

A clearance order (Safe Work Permit) shall be obtained from the operations shift supervisor prior to start of work.

[2] Notify the control room operator that dock no. 1 switchgear is now secured for maintenance.

11. AUTOMATIC SHUTDOWN OF DOCK NO. 1 SWITCHGEAR.

An automatic shutdown of dock no. 1 switchgear occurs when the fuses for the overhead fused disconnect switches detect an abnormal condition and blow open. In the event of an automatic shutdown, the following steps shall be executed to assist maintenance personnel in determining the cause of the shutdown.

11.1 Shutdown Investigation.

[1] Notify the control room operator that dock no. 1 switchgear has automatically shutdown and is being investigated.

WARNING

Due to the unknown nature or exact location of the condition which caused the automatic shutdown, all nonessential personnel shall stay clear of power distribution equipment associated with dock no. 1 switchgear.

[2] Clear the area around the switchgear of all nonessential personnel until isolation procedure is complete.

[3] Inspect the exterior of dock no. 1 switchgear for any signs of damage or conditions which may affect the system operation.

[4] At compartment 3FA, using the panel-mounted voltmeter, verify that incoming bus voltages for dock no. 1 switchgear are zero.

[5] At dock no. 1 switchgear (compartment 1FA), using the panel-mounted ammeter, verify that there is no load on the LBDS-1 disconnect switch.

[6] At compartment 1FA, check the status of the fused LBDS-1 disconnect switch for SJXFMR-7.

[7] At compartment 2FA, check the status of the fused disconnect switch for fire water pump SJTP-1.

[8] At compartment 4FA, check the status of the fused disconnect switch for fire water pump SJTP-3.

11.2 Switching and Isolation Operations.

[1] If the fuses for the overhead fused disconnect switches for the dock no. 1 switchgear have blown open, then perform isolation procedures per paragraph 10 above.

[2] Report all findings and actions taken to the supervisor.

12. RECORDS.

A. Any lock or tag attached to or removed from dock no. 1 switchgear or associated equipment shall be entered in lockout/tagout log.

B. Any findings of abnormal conditions shall be noted and reported to the control room operator, the supervisor, and the maintenance manager. A work request shall be initiated to correct the problem.

APPENDIX A

5KV SWITCHGEAR DOCK NO. 1 ONE-LINE DIAGRAM

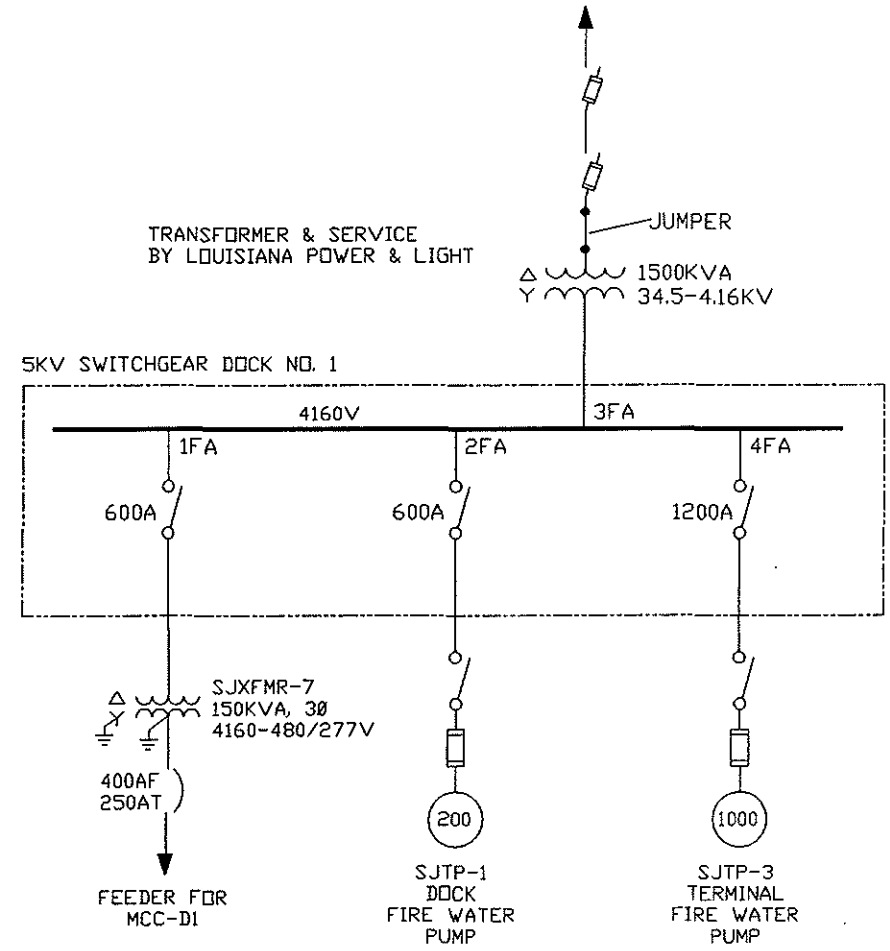

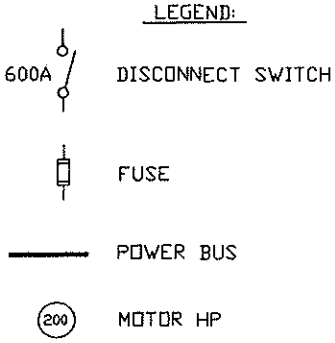

APPENDIX B

5KV SWITCHGEAR DOCK NO. 1 FRONT ELEVATION

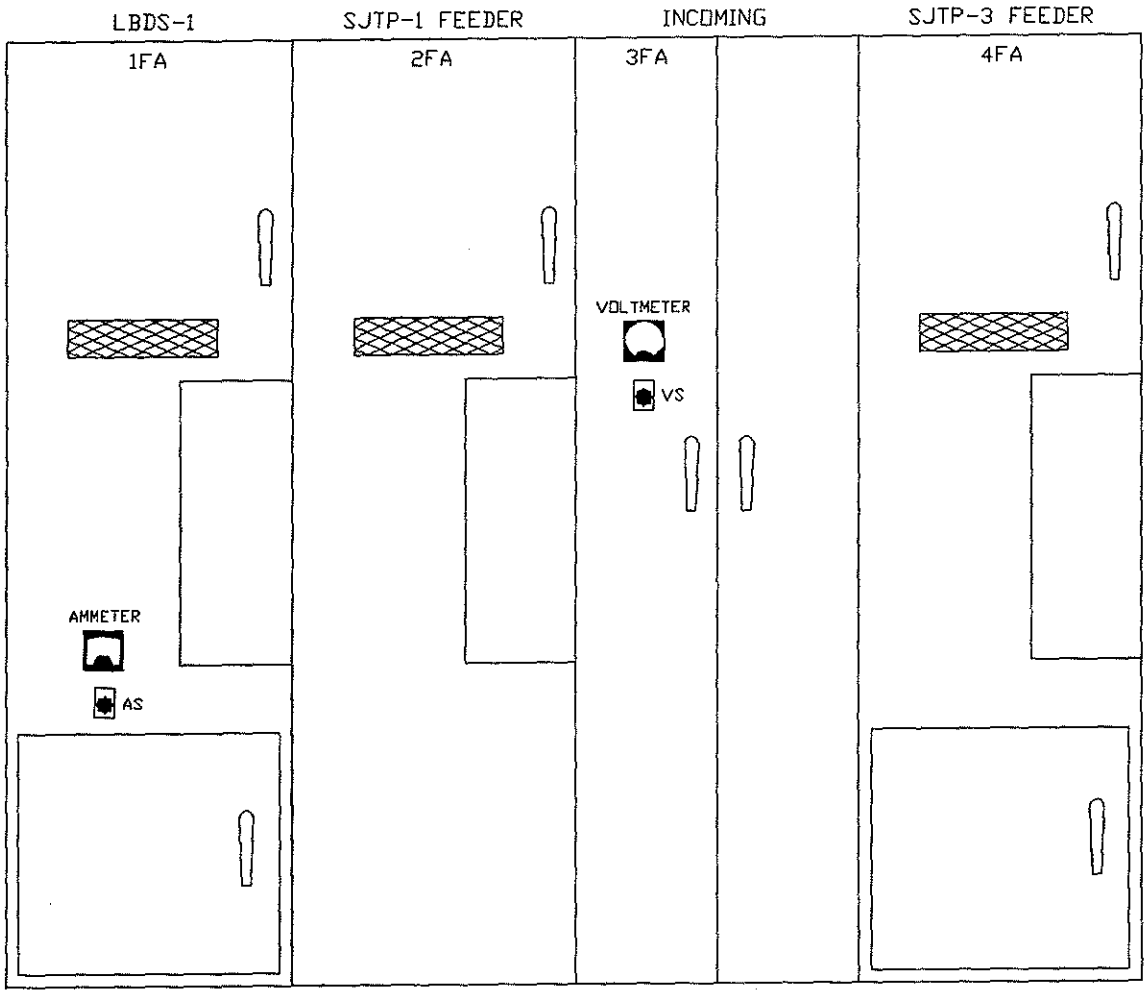

APPENDIX C

MOTOR CONTROLLERS FOR FIRE WATER PUMPS SJTP-1 AND SJTP-3
FRONT ELEVATION

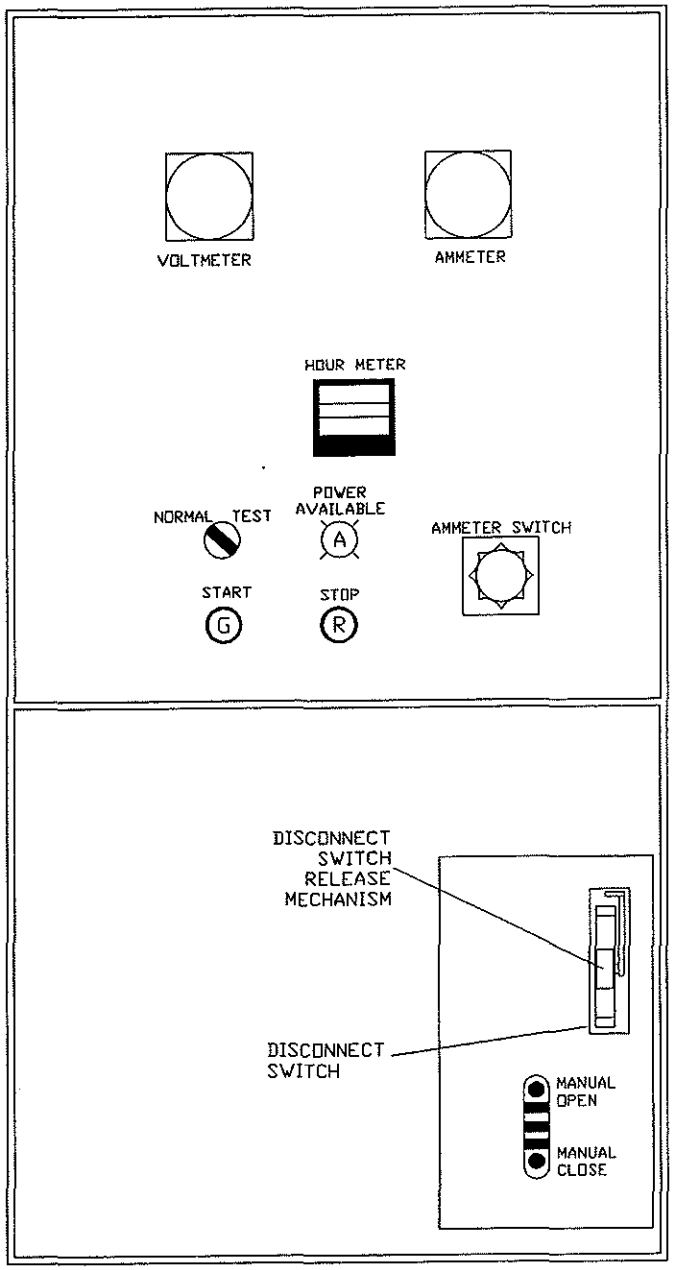

APPENDIX D

ELECTRICAL LOADS ASSOCIATED WITH 5KV SWITCHGEAR DOCK NO. 1

The following list of electrical loads are fed from dock no. 1 switchgear and will be affected by normal shutdown or automatic shutdown of dock no. 1 switchgear:

SJTP-1 dock no. 1 fire water pump no. 1.
SJTP-3 dock no. 1 fire water pump no. 3.
Motor Control Center D1 (MCC-D1) via 150KVA transformer SJXFMR-7:
- SJTP-5 Fire water jockey pump.
- SJTP-10 Slop oil pump.
- SJTP-11 Purge pump.
- BD-1 Breasting dolphin.
- BD-2 Breasting dolphin.
- MD-1 Mooring dolphin.
- MD-2 Mooring dolphin.
- BD-3 Breasting dolphin.
- BD-4 Breasting dolphin.
- MD-3 Mooring dolphin.
- MD-4 Mooring dolphin.
- Roadway, dock, and walkway lights.
- MOV-101.
- MOV-102.
- MOV-103.
- MOV-104.
- MOV-105.
- MOV-106.
- Cranes hydraulic package.
- Loading arms hydraulic package.
- Cathodic protection rectifier no. 2.
- Cathodic protection rectifier no. 1.
- 15KVA transformer for LP-1 control room lighting panel.
- 15KVA transformer for LP-6 fire water platform building lighting panel.
- 15KVA transformer for LP-5 fire water pump area lighting panel.
- 7.5KVA transformer (spare).

Additional loads via 150KVA transformer SJXFMR-7:
- 5KVA transformer for LP-3 substation lighting panel.
- Pressurizing fan.
- 15KVA transformer for LP-F1 fire protection power panel.
- Heating and air conditioning unit.

NORMAL OPERATING PROCEDURE

SAINT JAMES SITE

480V MOTOR CONTROL CENTER MCC-D1

NORMAL OPERATING PROCEDURE

SAINT JAMES SITE

480V MOTOR CONTROL CENTER MCC-D1

List of Effective Work Package Pages

Page No.	Chg. No.	Page No.	Chg. No.	Page No.	Chg. No.
1 thru 16	0				

Record of Applicable Technical Directives

None

TABLE OF CONTENTS

Para.	Title	Page
1.	INTRODUCTION	3
1.1	Purpose	3
1.2	Scope	3
1.3	Applicability	3
1.4	Reference Documents	3
2.	PRECAUTIONS AND LIMITATIONS	4
3.	PREREQUISITE ACTIONS	4
4.	NORMAL STARTUP OPERATION OF MCC-D1	5
4.1	Startup Preparations	5
4.2	Switching Operations	5
4.3	Monitoring	6
5.	TRANSFER MCC-D1 TO EMERGENCY POWER	6
5.1	Transfer Preparations	6
5.2	Switching Operations	6
5.3	Verification	7
6.	TRANSFER MCC-D1 TO NORMAL POWER	7
6.1	Transfer Preparations	7
6.2	Switching Operations	7
6.3	Verification	8
7.	ISOLATION PROCEDURE OF MCC-D1	8
7.1	Coordination of Operations	8
7.2	Switching Operations	8
7.3	Securing the Equipment	9
8.	AUTOMATIC SHUTDOWN OF MCC-D1	10
8.1	Shutdown Investigation	10
8.2	Switching and Isolation Operations	11
9.	RECORDS	12
Appendix A	MCC-D1 One-Line Diagram	13
Appendix B	MCC-D1 Front Elevation	15
Appendix C	Electrical Loads Associated with MCC-D1	16

1. INTRODUCTION.

Motor Control Center No. D1 (MCC-D1) is located in building 712 at dock no. 1. MCC-D1 is a 480/277-volt, three-phase, four-wire system with a 400-ampere frame main breaker with a 250-ampere trip. MCC-D1 receives normal power from dock no. 1 switchgear via step-down transformer SJXFMR-7 and emergency power from emergency generator LPG-1 through automatic transfer switch SJATS-2. MCC-D1 provides 480-volt power to 480-volt loads at dock no. 1. See Appendixes A, B, and C.

The Onan emergency generator set LPG-1 is rated 70KW and is used to provide 480/277-volt emergency power to MCC-D1 via automatic transfer switch SJATS-2. LPG-1 and SJATS-2 are located outdoors next to the dock no. 1 switchgear. When voltage sensors at SJATS-2 detect a loss of normal power, the control circuit will initiate the start sequence of LPG-1 and transfer MCC-D1 to emergency power. When normal power is restored, SJATS-2 will automatically switch back to normal power and LPG-1 will shut down after a cool down period.

1.1 Purpose. This procedure provides step-by-step operations which shall be performed to safely and efficiently operate MCC-D1.

1.2 Scope. This procedure provides directions to an authorized electrician for the performance of the following activities under normal conditions:

A. Start up MCC-D1.

B. Transfer MCC-D1 to emergency power.

C. Transfer MCC-D1 to normal power.

D. Isolate MCC-D1.

E. Investigate an automatic shutdown of MCC-D1.

1.3 Applicability. The activities described in this procedure shall be performed by an authorized electrician at the request of the supervisor.

1.4 Reference Documents.

A. One-Line Diagram Dock No. 1, drawing SJ-E-302-064.

B. Work package 025 00, 5KV Switchgear Dock No. 1.

2. **PRECAUTIONS AND LIMITATIONS.**

The following precautions and limitations apply to the operation of MCC-D1 and LPG-1:

A. All nonessential personnel shall maintain a minimum distance of 10 feet from MCC-D1 when power is first applied, until startup is complete.

B. Use of insulating gloves, protective body gowns, hooded face shields, and insulating floor mats are required during 5KV racking or switching operations.

C. A safety watch shall be stationed within the view of the electrician performing 5KV switching operations.

D. The possible power sources for MCC-D1 are LP&L and LPG-1. The nominal phase-to-phase voltage from each source is 480 volts (460V to 510V acceptable).

E. If rain is imminent or is falling, the doors to the enclosures of LPG-1 and SJATS-2 shall remain closed to prevent water entry.

3. **PREREQUISITE ACTIONS.**

The following prerequisite actions shall be accomplished prior to the operation of MCC-D1:

A. Review the job safety analysis (JSA), if applicable, on this equipment for potential safety hazards and review associated one-line diagrams with the supervisor.

B. The supervisor shall verify that routine preventive maintenance has been performed on MCC-D1, LPG-1, SJATS-2, and their components as described in the applicable maintenance requirement card (MRC).

C. The operations shift supervisor shall ensure all clearance orders (Safe Work Permits) associated with MCC-D1 have been issued.

D. Visually inspect MCC-D1, LPG-1, and SJATS-2 for any evidence of moisture, rodents, or other signs of damage. Report same to supervisor.

E. Visually check for any temporary wiring, grounds, locks, or tags. All findings shall be reported to the control room operator and the supervisor.

F. Site operations personnel shall verify equipment status and install or remove locks and tags as necessary.

4. NORMAL STARTUP OPERATION OF MCC-D1.

A normal startup operation is performed when 480V power is applied to MCC-D1 from dock no. 1 switchgear via SJXFMR-7, and emergency generator LPG-1 is not running. The following steps shall be executed to complete MCC-D1 startup.

4.1 Startup Preparations.

[1] Obtain an electrical switching order (ESO) from the supervisor.

[2] Clear the area around MCC-D1, SJXFMR-7, LPG-1, and dock no. 1 switchgear of all nonessential personnel until startup is complete.

[3] At MCC-D1, verify that all circuit breakers are in the OFF position.

[4] At dock no. 1 switchgear (compartment 1FA), verify that the LBDS-1 disconnect switch is in the OPEN position.

[5] At compartment 3FA, using the panel-mounted voltmeter, verify that the phase-to-phase bus voltages are nominally 4160 volts. Report any phase-to-phase readings less than 4000 volts to the supervisor.

4.2 Switching Operations.

[1] Notify the control room operator that MCC-D1 and SJXFMR-7 are being energized.

WARNING

An electrical fault and flash could cause injury or death to personnel. Use of insulating gloves, protective body gowns, hooded face shields, and insulating floor mats are required during 5KV racking and switching operations.

[2] At dock no. 1 switchgear (compartment 1FA), rotate the LBDS-1 disconnect switch to the CLOSED position.

NOTE

SJXFMR-7 is now energized.

[3] Notify the control room operator that SJXFMR-7 is now energized.

[4] At MCC-D1 (compartment 1FA), turn the handle of the MCC-D1 main breaker to the ON position.

4.3 Monitoring.

[1] At MCC-D1 (compartment 1FA), verify that the handle of the MCC-D1 main breaker is in the ON position.

[2] At dock no. 1 switchgear (compartment 3FA), using the panel-mounted voltmeter, verify that phase-to-phase bus voltages are 4160 volts (4000V minimum).

[3] At compartment 1FA, using the panel-mounted ammeter, verify that there is no load on SJXFMR-7.

NOTE

MCC-D1 is now energized and available for startup of other 480V equipment.

[4] Notify the control room operator that MCC-D1 is now energized.

5. TRANSFER MCC-D1 TO EMERGENCY POWER.

A transfer from normal power to emergency power is performed automatically by SJATS-2. The following steps shall be executed to manually transfer MCC-D1 to emergency power.

5.1 Transfer Preparations.

[1] Obtain an electrical switching order (ESO) from the supervisor.

[2] Clear the area around MCC-D1, LPG-1, and SJATS-2 of all nonessential personnel until transfer is complete.

[3] At the LPG-1 control panel, verify that the generator is set for automatic startup.

[4] At SJATS-2, verify that the white NORMAL indicating light is on.

5.2 Switching Operations.

[1] Notify the control room operator that MCC-D1 is being transferred to emergency power.

[2] At SJATS-2, turn the key switch to the TEST position.

NOTE 1

The control circuit at SJATS-2 will automatically start LPG-1. SJATS-2 will automatically transfer MCC-D1 to emergency power from LPG-1.

NOTE 2

If SJATS-2 does not automatically transfer, then manually transfer SJATS-2 to the EMERGENCY position.

5.3 Verification.

[1] At SJATS-2, verify that the amber EMERGENCY indicating light is on.

NOTE

MCC-D1 is now fed from LPG-1.

[2] Notify the control room operator that MCC-D1 is now transferred to emergency power.

6. TRANSFER MCC-D1 TO NORMAL POWER.

A transfer from emergency power to normal power is performed automatically by SJATS-2. The following steps shall be executed to manually transfer MCC-D1 from LPG-1 emergency power to 480V normal power from LP&L.

6.1 Transfer Preparations.

[1] Obtain an electrical switching order (ESO) from the supervisor.

[2] Clear the area around MCC-D1, LPG-1, and SJATS-2 of all nonessential personnel until transfer is complete.

[3] At SJATS-2, verify that the amber EMERGENCY indicating light is on.

6.2 Switching Operations.

[1] Notify the control room operator that MCC-D1 is being transferred to normal power.

[2] At SJATS-2, turn the key switch to the NORMAL position. Allow 3 to 5 minutes for transfer to take place.

NOTE 1

If turning the key switch to the NORMAL position does not transfer MCC-D1 to normal power, then turn the key switch to the RETRANSFER position.

NOTE 2

If turning the key switch to the RETRANSFER position does not transfer MCC-D1 to normal power, then manually transfer SJATS-2 to the NORMAL position.

NOTE 3

SJATS-2 will transfer MCC-D1 to its normal source of power. LPG-1 will automatically shut down after a cool down period.

6.3 Verification.

[1] At SJATS-2, verify that the white NORMAL indicating light is on.

[2] Visually check that the LPG-1 engine has stopped running.

[3] Notify the control room operator that LPG-1 is now shutdown.

NOTE

MCC-D1 is now fed normal power from LP&L.

[4] Notify the control room operator that normal power is now restored to MCC-D1.

7. ISOLATION PROCEDURE OF MCC-D1.

Isolation of MCC-D1 will remove all sources of 480V power to MCC-D1 and will prevent normal startup operation of MCC-D1 and SJXFMR-7.

7.1 Coordination of Operations.

[1] Obtain an electrical switching order (ESO) from the supervisor.

[2] Notify the control room operator that MCC-D1 is being isolated.

7.2 Switching Operations.

[1] At LPG-1, place the generator in the shutdown mode as follows:

[a] At the LPG-1 control panel, turn the toggle switch to the OFF position.

[b] Remove the positive dc battery cable from the dc battery supply.

[c] Turn the handle of the LPG-1 output breaker to the OFF position.

[2] At MCC-D1, verify that all branch circuits are de-energized by visually checking the position of all branch circuit breakers. Notify the supervisor of any remaining energized circuits.

[3] At compartment 1FA, turn the handle of the MCC-D1 main breaker to the OFF position.

WARNING

An electrical fault and flash could cause injury or death to personnel. Use of insulating gloves, protective body gowns, hooded face shields, and insulating floor mats are required during 5KV racking operations.

[4] At dock no. 1 switchgear (compartment 1FA), rotate the LBDS-1 disconnect switch to the OPEN position.

NOTE

MCC-D1 is now isolated.

[5] Notify the control room operator that MCC-D1 is now isolated.

7.3 Securing the Equipment.

WARNING

Failure to lock out the MCC-D1 main breaker, the positive dc battery cable, and the LBDS-1 disconnect switch for SJXFMR-7 will create a potential hazard for personnel performing maintenance on MCC-D1.

[1] At MCC-D1 (compartment 1FA), attach a lock and tag to the OFF MCC-D1 main breaker.

[2] At LPG-1, attach a lock and tag to the positive dc battery cable.

[3] At dock no. 1 switchgear (compartment 1FA), attach a lock and tag to the OPEN LBDS-1 disconnect switch.

[4] Log all locks and tags installed as part of the isolation procedure.

NOTE 1
MCC-D1 is now secured for maintenance.

NOTE 2
The number of each lock and tag as well as the name of the person who installed them shall be entered in the lockout/tagout log.

NOTE 3
A clearance order (Safe Work Permit) shall be obtained from the operations shift supervisor prior to start of work.

[5] Notify the control room operator that MCC-D1 is now secured for maintenance.

8. AUTOMATIC SHUTDOWN OF MCC-D1.

An automatic shutdown of MCC-D1 occurs when protective devices detect an abnormal condition and trip open the MCC-D1 main breaker, the secondary breaker of SJXFMR-7, or the fuses for the LBDS-1 disconnect switch are blown.

When MCC-D1 loses normal power, LPG-1 will automatically start and SJATS-2 will transfer emergency power to MCC-D1. If the condition that caused MCC-D1 to shut down is detected at LPG-1, the output breaker at LPG-1 will also trip and shut down emergency power to MCC-D1. In the event of an automatic shutdown, the following steps shall be executed to assist maintenance personnel in determining the cause of the shutdown.

8.1 Shutdown Investigation.

[1] Notify the control room operator that MCC-D1 has automatically shutdown and is being investigated.

WARNING

Due to the unknown nature or exact location of the condition which caused the automatic shutdown, all nonessential personnel shall stay clear of power distribution equipment associated with MCC-D1 and LPG-1.

[2] Clear the area around MCC-D1 and LPG-1 of all nonessential personnel until isolation procedure is complete.

[3] Inspect the exterior of MCC-D1, LPG-1, and SJATS-2 for any signs of damage or conditions which may affect the system operation.

[4] At MCC-D1, record the status of the following items:

[a] Main breaker - open, tripped, or closed.

[b] All branch circuit breakers that have tripped.

[5] At SJXFMR-7, record the status of the SJXFMR-7 secondary breaker - open, tripped, or closed.

[6] At dock no. 1 switchgear (compartment 3FA), using the panel-mounted voltmeter, record the phase-to-phase voltages.

[7] At dock no. 1 switchgear (compartment 1FA), record the status of the fuses for the LBDS-1 disconnect switch.

[8] At LPG-1, record the status of LPG-1 - off or running.

[9] Record the status of the LPG-1 output breaker - open, tripped, or closed.

[10] At SJATS-2, record the status of SJATS-2.

8.2 Switching and Isolation Operations.

[1] If the MCC-D1 main breaker and the secondary breaker of SJXFMR-7 have both tripped open, then isolate per paragraph 7 above.

[2] If only the MCC-D1 main breaker has tripped open, then isolate as follows:

[a] Turn the handle of the MCC-D1 main breaker to the OFF position.

[b] Attach a lock and tag to the MCC-D1 main breaker.

[c] Enter the lock and tag into the lockout/tagout log.

[3] If the MCC-D1 main breaker is still closed, but the secondary breaker of SJXFMR-7 has tripped open, then isolate per paragraph 7 above.

[4] If the LPG-1 output breaker has tripped open, then isolate per paragraph 7 above.

[5] If the fuses for the LBDS-1 disconnect switch are blown, then isolate per paragraph 7 above.

[6] Report all findings and actions taken to the supervisor.

9. **RECORDS.**

A. Any locks or tags attached to or removed from MCC-D1, dock no. 1 switchgear, or LPG-1 shall be entered in the lockout/tagout log by operations personnel.

B. Any findings of abnormal conditions shall be noted and reported to the control room operator, the supervisor, and the maintenance manager. A work request shall be initiated to correct the problem.

APPENDIX A

MCC-D1 ONE-LINE DIAGRAM
(Sheet 1 of 2)

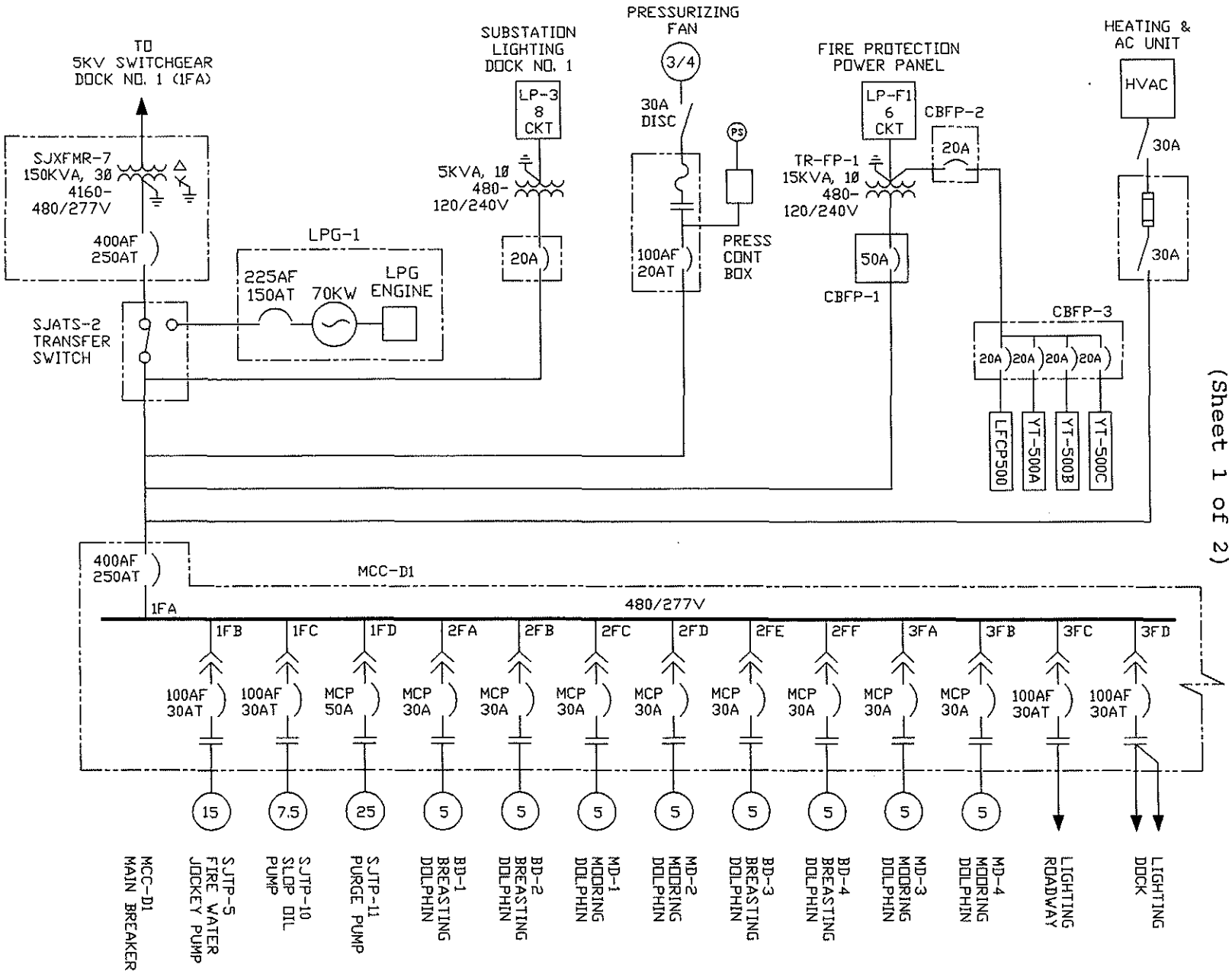

APPENDIX A

MCC-D1 ONE-LINE DIAGRAM
(Sheet 2)

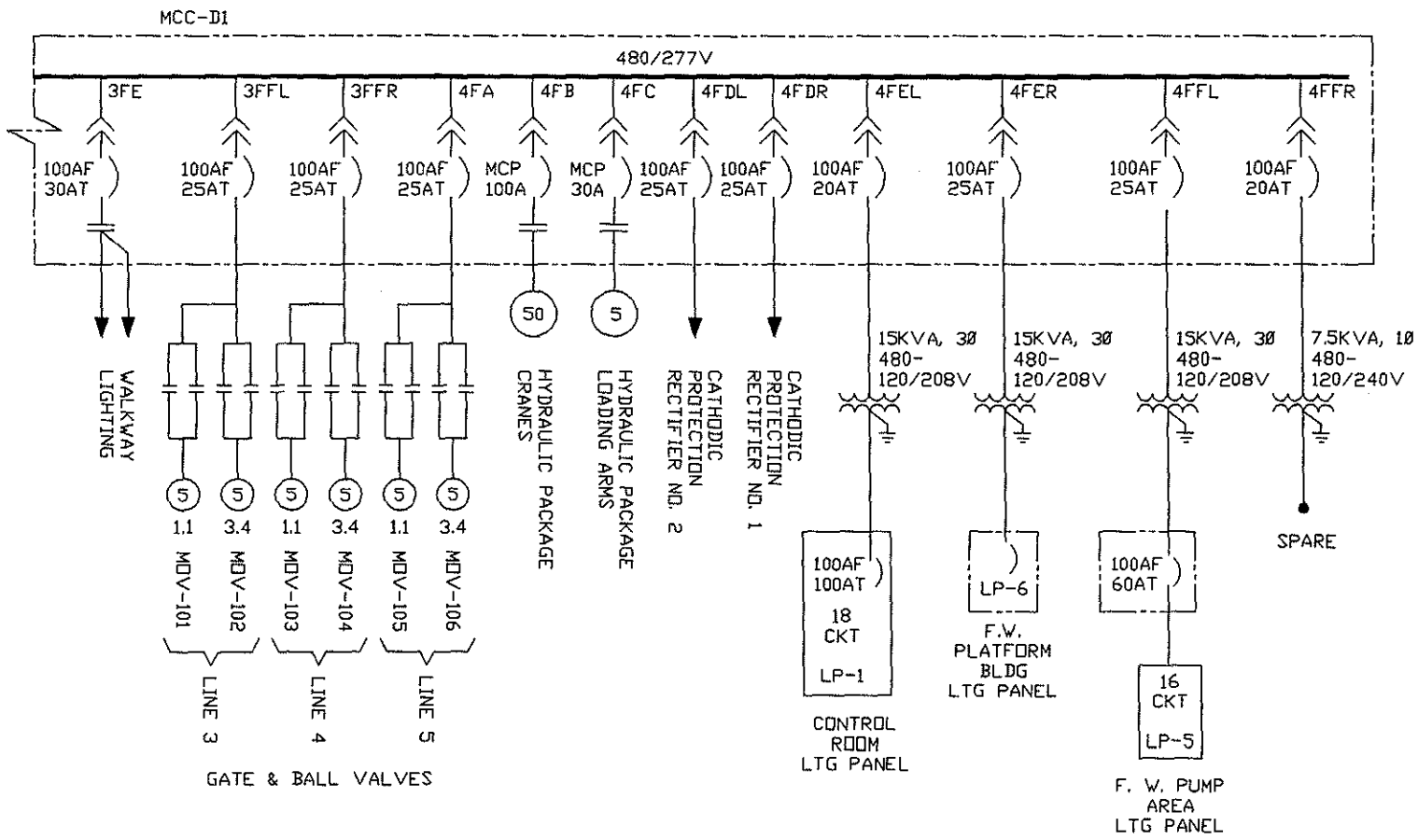

APPENDIX B

MCC-D1 FRONT ELEVATION

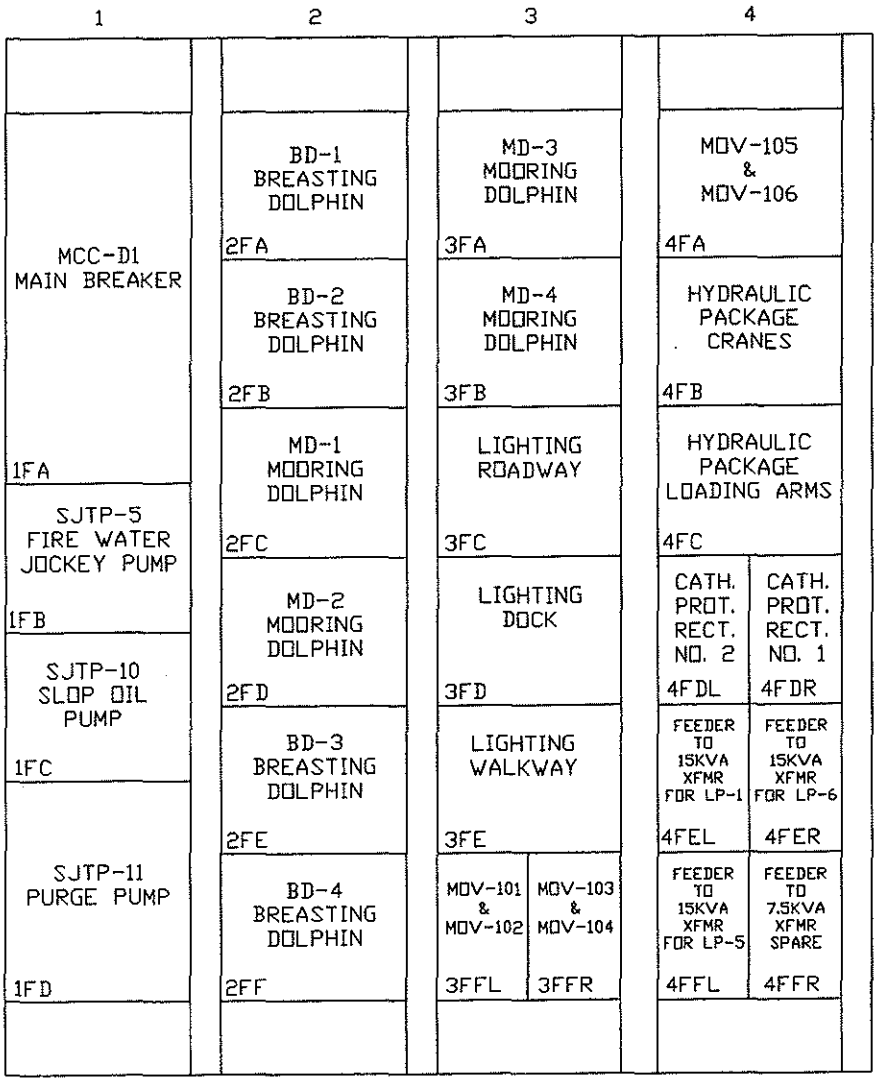

APPENDIX C

ELECTRICAL LOADS ASSOCIATED WITH MCC-D1

The following list of electrical loads are fed from MCC-D1 and will be affected by normal shutdown or automatic shutdown of MCC-D1:

SJTP-5 Fire water jockey pump.
SJTP-10 Slop oil pump.
SJTP-11 Purge pump.
BD-1 Breasting dolphin.
BD-2 Breasting dolphin.
MD-1 Mooring dolphin.
MD-2 Mooring dolphin.
BD-3 Breasting dolphin.
BD-4 Breasting dolphin.
MD-3 Mooring dolphin.
MD-4 Mooring dolphin.
Roadway, dock, and walkway lights.
MOV-101.
MOV-102.
MOV-103.
MOV-104.
MOV-105.
MOV-106.
Cranes hydraulic package.
Loading arms hydraulic package.
Cathodic protection rectifier no. 2.
Cathodic protection rectifier no. 1.
15KVA transformer for LP-1 control room lighting panel.
15KVA transformer for LP-6 fire water platform building lighting panel.
15KVA transformer for LP-5 fire water pump area lighting panel.
7.5KVA transformer (spare).

NORMAL OPERATING PROCEDURE

SAINT JAMES SITE

480V MOTOR CONTROL CENTER MCC-D2

NORMAL OPERATING PROCEDURE

SAINT JAMES SITE

480V MOTOR CONTROL CENTER MCC-D2

List of Effective Work Package Pages

Page No.	Chg. No.	Page No.	Chg. No.	Page No.	Chg. No.
1 thru 15	0	16(Blank)	0		

Record of Applicable Technical Directives

None

TABLE OF CONTENTS

Para.	Title	Page
1.	INTRODUCTION	3
1.1	Purpose	3
1.2	Scope	3
1.3	Applicability	3
1.4	Reference Documents	3
2.	PRECAUTIONS AND LIMITATIONS	4
3.	PREREQUISITE ACTIONS	4
4.	NORMAL STARTUP OPERATION OF MCC-D2	4
4.1	Startup Preparations	5
4.2	Switching Operations	5
4.3	Monitoring	5
5.	TRANSFER MCC-D2 TO EMERGENCY POWER	5
5.1	Transfer Preparations	6
5.2	Switching Operations	6
5.3	Verification	6
6.	TRANSFER MCC-D2 TO NORMAL POWER	6
6.1	Transfer Preparations	6
6.2	Switching Operations	7
6.3	Verification	7
7.	ISOLATION PROCEDURE OF MCC-D2	8
7.1	Coordination of Operations	8
7.2	Switching Operations	8
7.3	Securing the Equipment	9
8.	AUTOMATIC SHUTDOWN OF MCC-D2	9
8.1	Shutdown Investigation	10
8.2	Switching and Isolation Operations	10
9.	RECORDS	11
Appendix A	MCC-D2 One-Line Diagram	12
Appendix B	MCC-D2 Front Elevation	14
Appendix C	Electrical Loads Associated with MCC-D2	15

1. INTRODUCTION.

Motor Control Center No. D2 (MCC-D2) is located in building 713 at dock no. 2. MCC-D2 is a 480/277-volt, three-phase, four-wire system with a 400-ampere frame main breaker with a 250-ampere trip. MCC-D2 receives normal power from three LP&L pole-mounted transformers and emergency power from emergency generator LPG-2 through automatic transfer switch SJATS-3. MCC-D2 provides 480-volt power to 480-volt loads at dock no. 2. See Appendixes A, B, and C.

The Onan emergency generator set LPG-2 is rated 70KW and is used to provide 480/277-volt emergency power to MCC-D2 via automatic transfer switch SJATS-3. LPG-2 and SJATS-3 are located outdoors next to the dock no. 2 substation. When voltage sensors at SJATS-3 detect a loss of normal power, the control circuit will initiate the start sequence of LPG-2 and transfer MCC-D2 to emergency power. When normal power is restored, SJATS-3 will automatically switch back to normal power and LPG-2 will shut down after a cool down period.

1.1 **Purpose.** This procedure provides step-by-step operations which shall be performed to safely and efficiently operate MCC-D2.

1.2 **Scope.** This procedure provides directions to an authorized electrician for the performance of the following activities under normal conditions:

A. Start up MCC-D2.

B. Transfer MCC-D2 to emergency power.

C. Transfer MCC-D2 to normal power.

D. Isolate MCC-D2.

E. Investigate an automatic shutdown of MCC-D2.

1.3 **Applicability.** The activities described in this procedure shall be performed by an authorized electrician at the request of the supervisor.

1.4 **Reference Documents.**

A. One-Line Diagram Dock No. 2, drawing SJ-E-302-065.

2. PRECAUTIONS AND LIMITATIONS.

The following precautions and limitations apply to the operation of MCC-D2 and LPG-2:

A. All nonessential personnel shall maintain a minimum distance of 10 feet from MCC-D2 when power is first applied, until startup is complete.

B. The possible power sources for MCC-D2 are LP&L and LPG-2. The nominal phase-to-phase voltage from each source is 480 volts (460V to 510V acceptable).

C. If rain is imminent or is falling, the doors to the enclosures of LPG-2 and SJATS-3 shall remain closed to prevent water entry.

3. PREREQUISITE ACTIONS.

The following prerequisite actions shall be accomplished prior to the operation of MCC-D2:

A. Review the job safety analysis (JSA), if applicable, on this equipment for potential safety hazards and review associated one-line diagrams with the supervisor.

B. The supervisor shall verify that routine preventive maintenance has been performed on MCC-D2, LPG-2, SJATS-3, and their components as described in the applicable maintenance requirement card (MRC).

C. The operations shift supervisor shall ensure all clearance orders (Safe Work Permits) associated with MCC-D2 have been issued.

D. Visually inspect MCC-D2, LPG-2, and SJATS-3 for any evidence of moisture, rodents, or other signs of damage. Report same to supervisor.

E. Visually check for any temporary wiring, grounds, locks, or tags. All findings shall be reported to the control room operator and the supervisor.

F. Site operations personnel shall verify equipment status and install or remove locks and tags as necessary.

4. NORMAL STARTUP OPERATION OF MCC-D2.

A normal startup operation is performed when 480V power is applied to MCC-D2 from dock no. 2 substation via LP&L

transformers, and LPG-2 is not running. The following steps shall be executed to complete MCC-D2 startup.

4.1 Startup Preparations.

[1] Obtain an electrical switching order (ESO) from the supervisor.

[2] Clear the area around MCC-D2, LPG-2, and dock no. 2 substation of all nonessential personnel until startup is complete.

[3] At MCC-D2, verify that all circuit breakers are in the OFF position.

[4] At dock no. 2 substation, verify that the incoming breaker is in the OFF position.

4.2 Switching Operations.

[1] Notify the control room operator that MCC-D2 is being energized.

[2] At dock no. 2 substation, turn the handle of the incoming breaker to the ON position.

[3] At MCC-D2 (compartment 1FA), turn the handle to the MCC-D2 main breaker to the ON position.

4.3 Monitoring.

[1] At MCC-D2 (compartment 1FA), verify that the handle of the MCC-D2 main breaker is in the ON position.

[2] At dock no. 2 substation, verify that the handle of the incoming breaker is in the ON position.

NOTE

MCC-D2 is now energized and available for startup of other 480V equipment.

[3] Notify the control room operator that MCC-D2 is now energized.

5. TRANSFER MCC-D2 TO EMERGENCY POWER.

A transfer from normal power to emergency power is performed automatically by SJATS-3. The following steps shall be executed to manually transfer MCC-D2 to emergency power.

5.1 Transfer Preparations.

[1] Obtain an electrical switching order (ESO) from the supervisor.

[2] Clear the area around MCC-D2, LPG-2, and SJATS-3 of all nonessential personnel until transfer is complete.

[3] At the LPG-2 control panel, verify that the generator is set for automatic startup.

[4] At SJATS-3, verify that the white NORMAL indicating light is on.

5.2 Switching Operations.

[1] Notify the control room operator that MCC-D2 is being transferred to emergency power.

[2] At SJATS-3, turn the key switch to the TEST position.

NOTE 1

The control circuit at SJATS-3 will automatically start LPG-2. SJATS-3 will automatically transfer MCC-D2 to emergency power from LPG-2.

NOTE 2

If SJATS-3 does not automatically transfer, then manually transfer SJATS-3 to the EMERGENCY position.

5.3 Verification.

[1] At SJATS-3, verify that the amber EMERGENCY indicating light is on.

NOTE

MCC-D2 is now fed from LPG-2.

[2] Notify the control room operator that MCC-D2 is now transferred to emergency power.

6. TRANSFER MCC-D2 TO NORMAL POWER.

A transfer from emergency power to normal power is performed automatically by SJATS-3. The following steps shall be executed to manually transfer MCC-D2 from LPG-2 emergency power to 480V normal power from LP&L.

6.1 Transfer Preparations.

[1] Obtain an electrical switching order (ESO) from the supervisor.

[2] Clear the area around MCC-D2, LPG-2, and SJATS-3 of all nonessential personnel until transfer is complete.

[3] At SJATS-3, verify that the amber EMERGENCY indicating light is on.

6.2 Switching Operations.

[1] Notify the control room operator that MCC-D2 is being transferred to normal power.

[2] At SJATS-3, turn the key switch to the NORMAL position. Allow 3 to 5 minutes for transfer to take place.

NOTE 1

If turning the key switch to the NORMAL position does not transfer MCC-D2 to normal power, then turn the key switch to the RETRANSFER position.

NOTE 2

If turning the key switch to the RETRANSFER position does not transfer MCC-D2 to normal power, then manually transfer SJATS-3 to the NORMAL position.

NOTE 3

SJATS-3 will transfer MCC-D2 to its normal source of power. LPG-2 will automatically shut down after a cool down period.

6.3 Verification.

[1] At SJATS-3, verify that the white NORMAL indicating light is on.

[2] Visually check that the LPG-2 engine has stopped running.

[3] Notify the control room operator that LPG-2 is now shutdown.

NOTE

MCC-D2 is now fed normal power from LP&L.

[4] Notify the control room operator that normal power is now restored to MCC-D2.

7. ISOLATION PROCEDURE OF MCC-D2.

Isolation of MCC-D2 will remove all sources of 480V power to MCC-D2 and will prevent normal startup operation of MCC-D2.

7.1 Coordination of Operations.

[1] Obtain an electrical switching order (ESO) from the supervisor.

[2] Notify the control room operator that MCC-D2 is being isolated.

7.2 Switching Operations.

[1] At LPG-2, place the generator in the shutdown mode as follows:

[a] At the LPG-2 control panel, turn the toggle switch to the OFF position.

[b] Remove the positive dc battery cable from the dc battery supply.

[c] Turn the handle of the LPG-2 output breaker to the OFF position.

[2] At MCC-D2, verify that all branch circuits are de-energized by visually checking the position of all branch circuit breakers. Notify the supervisor of any remaining energized circuits.

[3] At compartment 1FA, turn the handle of the MCC-D2 main breaker to the OFF position.

[4] At dock no. 2 substation, turn the handle of the incoming breaker to the OFF position.

NOTE
MCC-D2 is now isolated.

[5] Notify the control room operator that MCC-D2 is now isolated.

7.3 Securing the Equipment.

WARNING

Failure to lock out the MCC-D2 main breaker, the positive dc battery cable, and the dock no. 2 substation incoming breaker will create a potential hazard for personnel performing maintenance on MCC-D2.

[1] At MCC-D2 (compartment 1FA), attach a lock and tag to the OFF MCC-D2 main breaker.

[2] At LPG-2, attach a lock and tag to the positive dc battery cable.

[3] At dock no. 2 substation, attach a lock and tag to the dock no. 2 substation incoming breaker.

[4] Log all locks and tags installed as part of the isolation procedure.

NOTE 1

MCC-D2 is now secured for maintenance.

NOTE 2

The number of each lock and tag as well as the name of the person who installed them shall be entered in the lockout/tagout log.

NOTE 3

A clearance order (Safe Work Permit) shall be obtained from the operations shift supervisor prior to start of work.

[5] Notify the control room operator that MCC-D2 is now secured for maintenance.

8. AUTOMATIC SHUTDOWN OF MCC-D2.

An automatic shutdown of MCC-D2 occurs when protective devices detect an abnormal condition and trip open the MCC-D2 main breaker or the dock no. 2 substation incoming breaker.

When MCC-D2 loses normal power, LPG-2 will automatically start and SJATS-3 will transfer emergency power to MCC-D2. If the condition that caused MCC-D2 to shut down is detected at LPG-2, the output breaker at LPG-2 will also trip and shut down emergency power to MCC-D2. In the event of an automatic shutdown, the following

steps shall be executed to assist maintenance personnel in determining the cause of the shutdown.

8.1 Shutdown Investigation.

[1] Notify the control room operator that MCC-D2 has automatically shutdown and is being investigated.

WARNING

Due to the unknown nature or exact location of the condition which caused the automatic shutdown, all nonessential personnel shall stay clear of power distribution equipment associated with MCC-D2 and LPG-2.

[2] Clear the area around MCC-D2 and LPG-2 of all nonessential personnel until isolation procedure is complete.

[3] Inspect the exterior of MCC-D2, LPG-2, and SJATS-3 for any signs of damage or conditions which may affect the system operation.

[4] At MCC-D2, record the status of the following items:

[a] Main breaker - open, tripped, or closed.

[b] All branch circuit breakers that have tripped.

[5] At dock no. 2 substation, record the status of the dock no. 2 substation incoming breaker.

[6] At LPG-2, record the status of LPG-2 - off or running.

[7] Record the status of the LPG-2 output breaker - open, tripped, or closed.

[8] At SJATS-3, record the status of SJATS-3.

8.2 Switching and Isolation Operations.

[1] If the MCC-D2 main breaker and the dock no. 2 substation incoming breaker have both tripped open, then isolate per paragraph 7 above.

[2] If only the MCC-D2 main breaker has tripped open, then isolate as follows:

[a] Turn the handle of the MCC-D2 main breaker to the OFF position.

[b] Attach a lock and tag to the MCC-D2 main breaker.

[c] Enter the lock and tag into the lockout/tagout log.

[3] If the MCC-D2 main breaker is still closed, but the dock no. 2 substation incoming breaker has tripped open, then isolate per paragraph 7 above.

[4] If the LPG-2 output breaker has tripped open, then isolate per paragraph 7 above.

[5] Report all findings and actions taken to the supervisor.

9. **RECORDS.**

A. Any locks or tags attached to or removed from MCC-D2, dock no. 2 substation incoming breaker, or LPG-2 shall be entered in the lockout/tagout log by operations personnel.

B. Any findings of abnormal conditions shall be noted and reported to the control room operator, the supervisor, and the maintenance manager. A work request shall be initiated to correct the problem.

APPENDIX A

MCC-D2 ONE-LINE DIAGRAM
(Sheet 1 of 2)

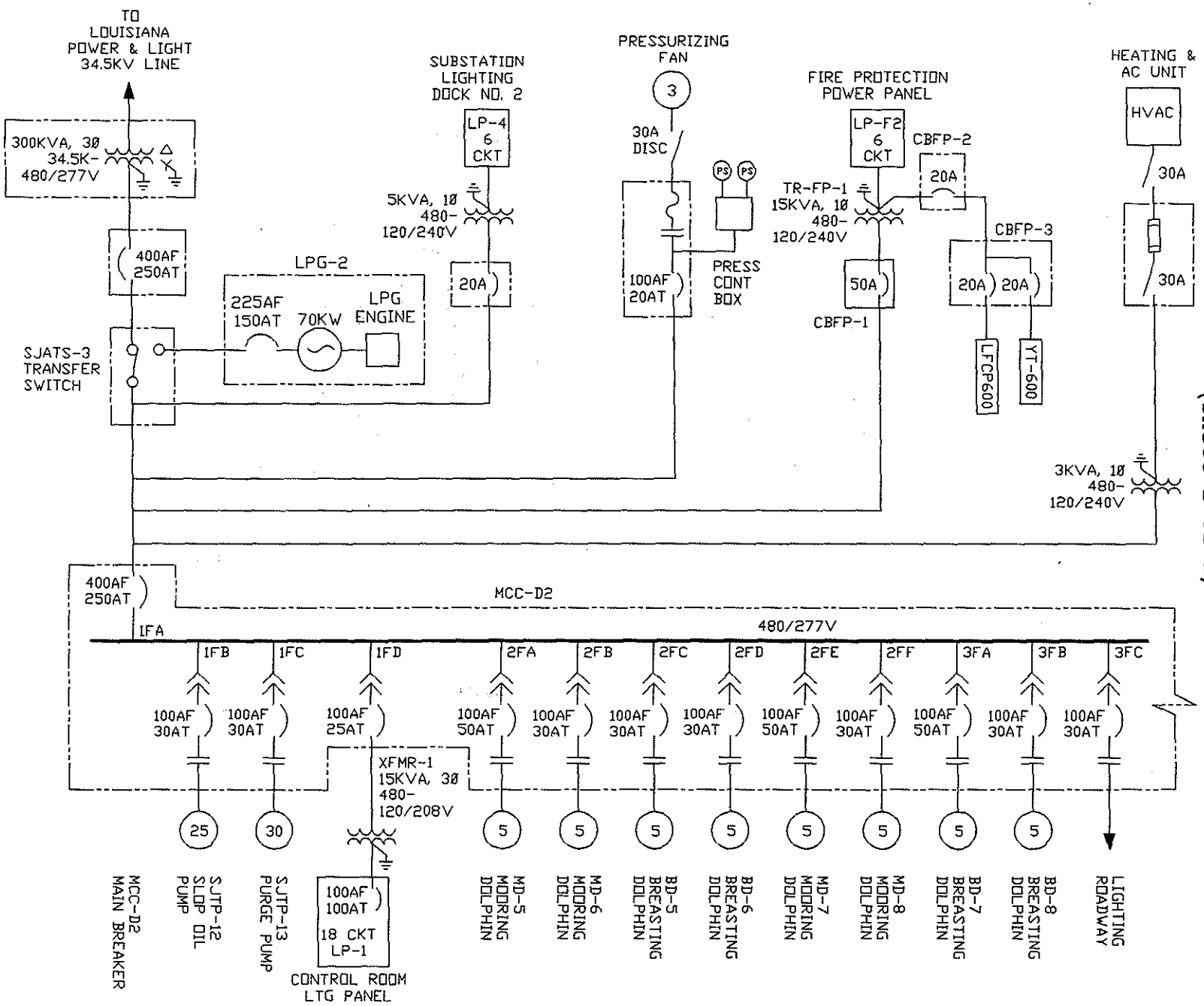

APPENDIX A

MCC-D2 ONE-LINE DIAGRAM
(Sheet 2)

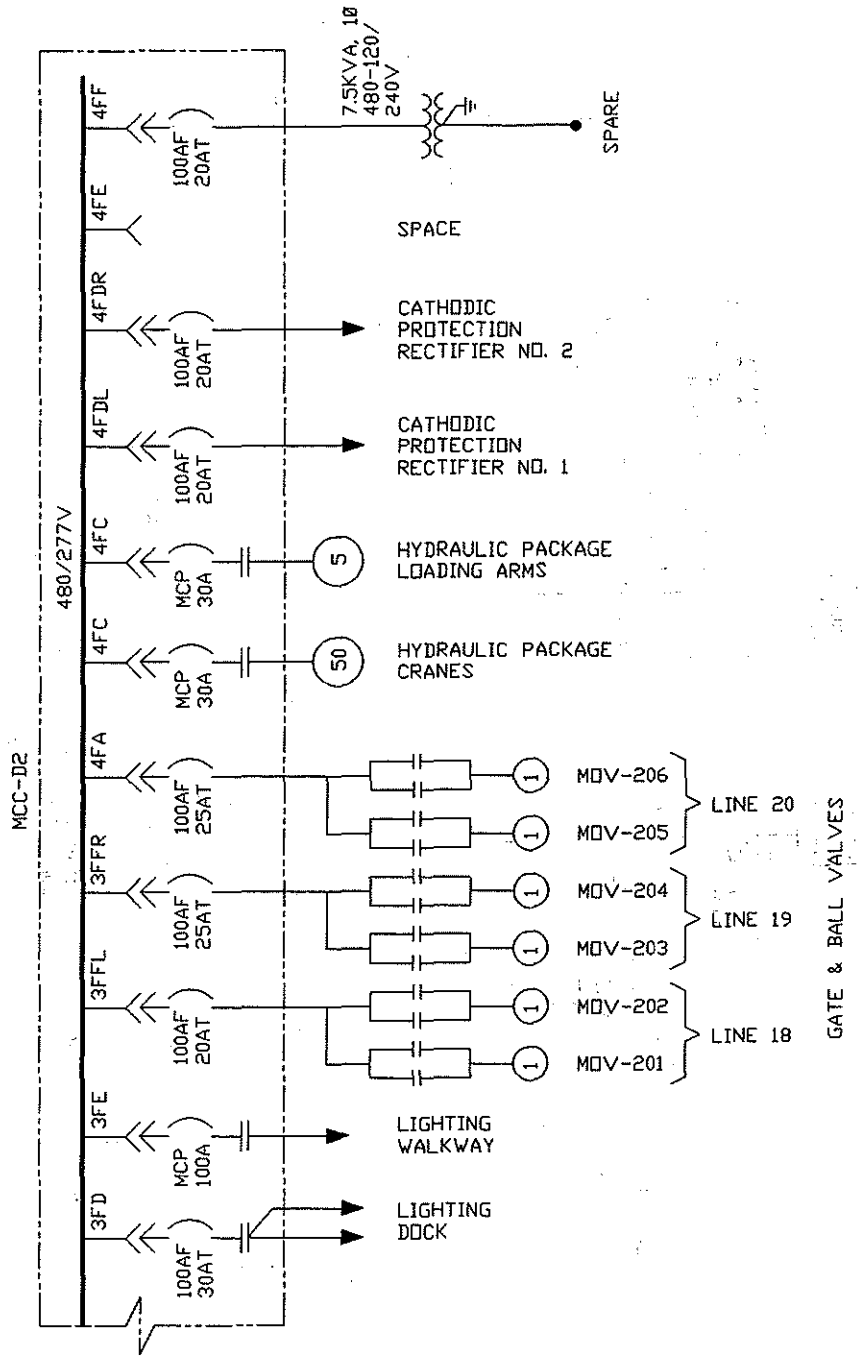

APPENDIX B

MCC-D2 FRONT ELEVATION

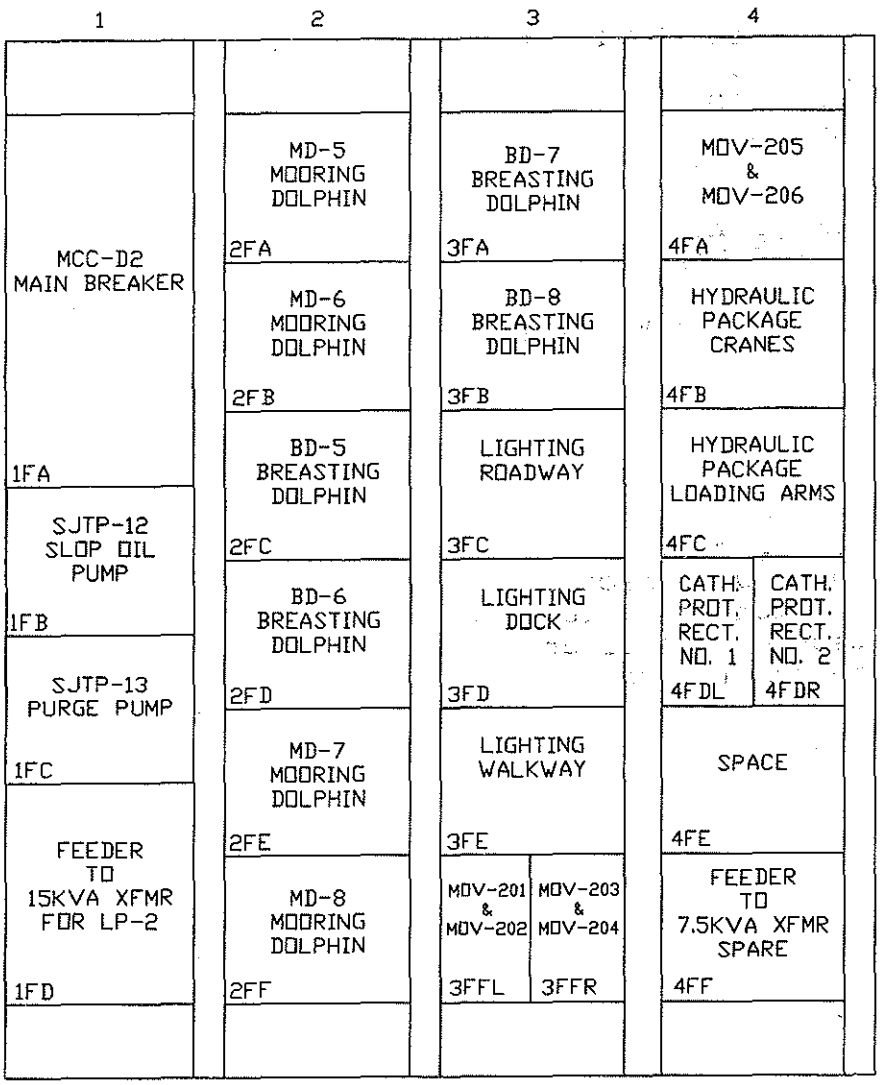

APPENDIX C

ELECTRICAL LOADS ASSOCIATED WITH MCC-D2

The following list of electrical loads are fed from MCC-D2 and will be affected by normal shutdown or automatic shutdown of MCC-D2:

SJTP-12 Slop oil pump.
SJTP-13 Purge pump.
15KVA transformer for LP-2 control room lighting panel.
MD-5 Mooring dolphin.
MD-6 Mooring dolphin.
BD-5 Breasting dolphin.
BD-6 Breasting dolphin.
MD-7 Mooring dolphin.
MD-8 Mooring dolphin.
BD-7 Breasting dolphin.
BD-8 Breasting dolphin.
Roadway, dock, and walkway lights.
MOV-201.
MOV-202.
MOV-203.
MOV-204.
MOV-205.
MOV-206.
Cranes hydraulic package.
Loading arms hydraulic package.
Cathodic protection rectifier no. 1.
Cathodic protection rectifier no. 2.
7.5KVA transformer (spare).